INSTALLATION GUIDE

AMP RESEARCH PowerStep

MADE IN USA

APPLICATION		MODEL YR	PART #
Dodge Ram Quad Cab *	1500	2009 - up	75138-01A
Dodge Ram Crew Cab	1500	2009 - up	75138-01A
Dodge Ram Crew Cab	2500/3500	2010 - up	75138-01A
Dodge Ram Mega Cab	2500/3500	2010 - up	75138-01A

***Modification required to running board assembly. See Item 1 on page 3.**

NOTE: Wiring on the 2013 1500 has changed. See Page 10 for details.

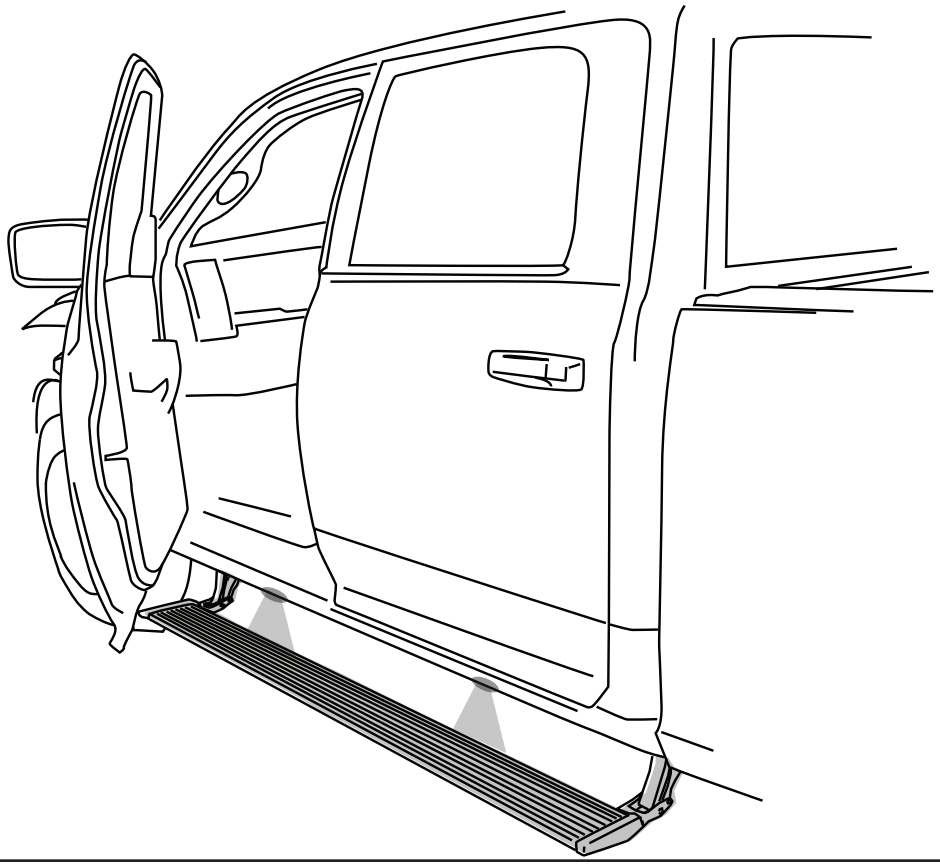

INSTALLATION TIME

3-5 Hours

Professional installation recommended

SKILL LEVEL

1 2 3 **4**

4= Experienced

TOOLS REQUIRED

- ❑ Safety goggles
- ❑ Measuring tape
- ❑ 13mm wrench
- ❑ 19mm wrench
- ❑ 13mm socket
- ❑ 10mm socket
- ❑ Ratchet wrench and extension
- ❑ Wire stripper / cutter
- ❑ 3/16” hex key (allen wrench)
- ❑ 4mm hex key (allen wrench)
- ❑ Electrical tape

WARRANTY

5-Year Limited Warranty

AMP RESEARCH TECH SUPPORT 1-888-983-2204 (Press 2) Monday - Friday, 6:00 AM - 5:00 PM PST

Invented, engineered and manufactured exclusively by AMP Research in the USA. May be covered by one of the following patents: 6,641,158; 6,830,257; 6,834,875; 6,938,909; 7,055,839; 7,380,807; 7,398,985; 7,584,975 ©2012 AMP Research. All rights reserved. Printed in USA.

INSTALLATION GUIDE
Attaching motor to linkage assembly

The motors must be attached to the linkage assemblies before continuing the installation process.

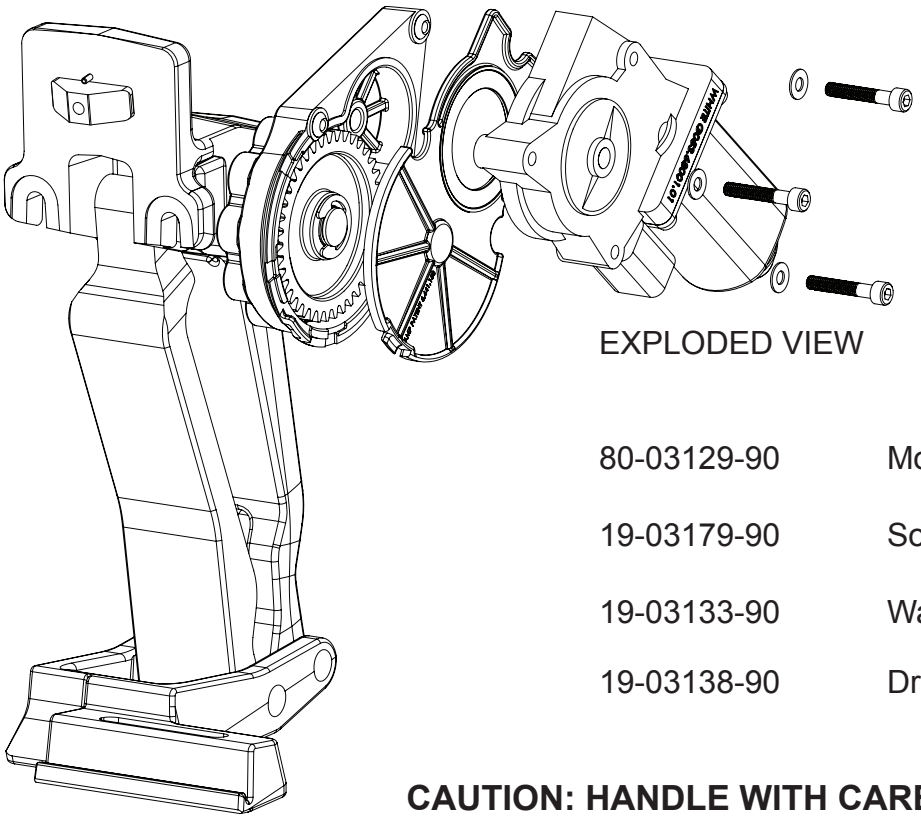

EXPLODED VIEW

80-03129-90	Motor
19-03179-90	Socket cap screw
19-03133-90	Washer
19-03138-90	Drive Gear Housing Cover

CAUTION: HANDLE WITH CARE.

To ensure our customers receive all components with full integrity, we pack the motors separate from their linkage assemblies. This requires that the installer position and fasten the motor before continuing with the install. Please follow the instructions below and handle the assembly carefully.

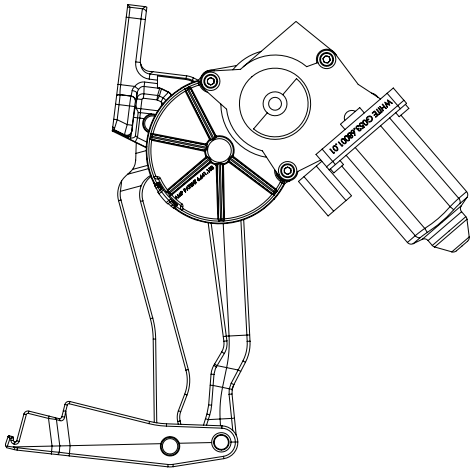

CAUTION: Dropping the assembly or any excessive impact MAY cause damage to the motor.

Instructions:

1. Position the gear cover in place as shown if not already in place.

2. Seat motor into position on the three mounting bosses. This may require an adjustment of the gear by moving the swing arms.

3. After seating into place, fasten the motor with the three motor mount screws with 4mm Hex Head. Tighten screws to 36 in-lbs (4N-m). **Do not over torque.**

Note: Some Applications require modification.

Application	Cut Length
Crew Cab, Mega Cab	79" (No Modification Required)
Quad Cab	72" (Trim 7")

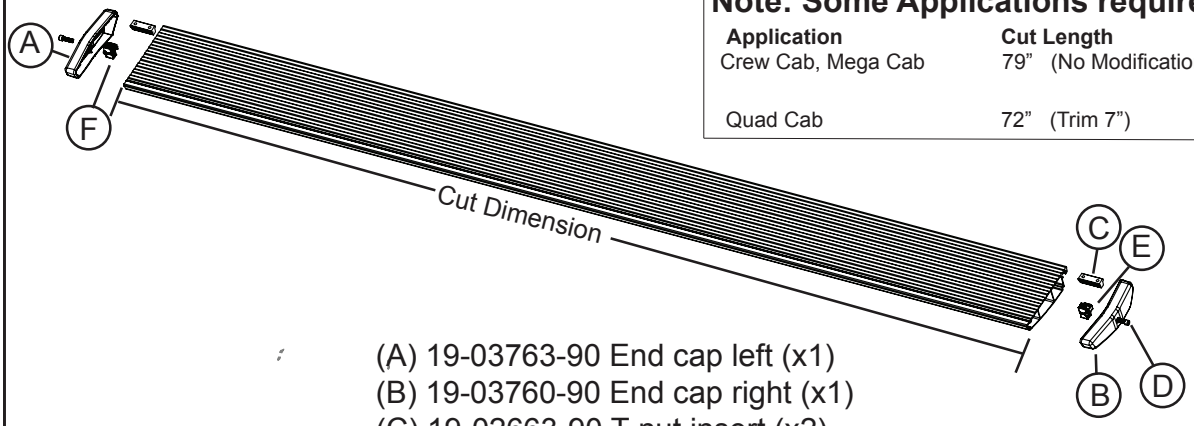

(A) 19-03763-90 End cap left (x1)
(B) 19-03760-90 End cap right (x1)
(C) 19-02663-90 T-nut insert (x2)
(D) 19-02802-90 Socket cap screw (x2)
(E) 19-03761-90 End cap wedge right (x1)
(F) 19-03764-90 End cap wedge left (x1)

(1) x2
Running board assembly

Driver Side Linkages

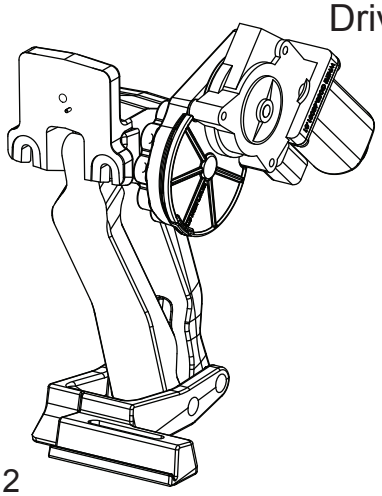

(2a)
10-03656-12
Motor Linkage Assembly - Driver Side

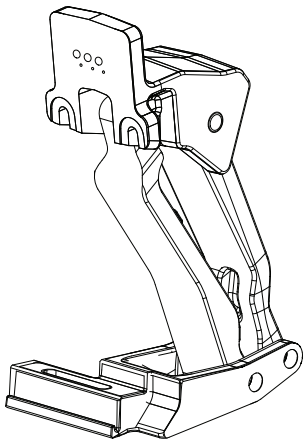

(3a)
10-03662-12
Idler Linkage Assembly - Driver Side

Passenger Side Linkages

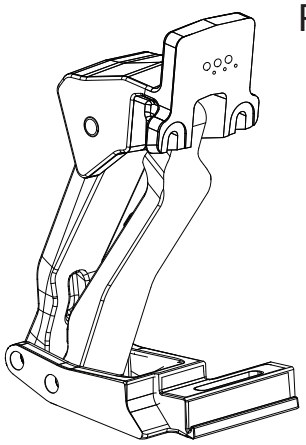

(3b)
10-03662-11
Idler Linkage Assembly - Passenger Side

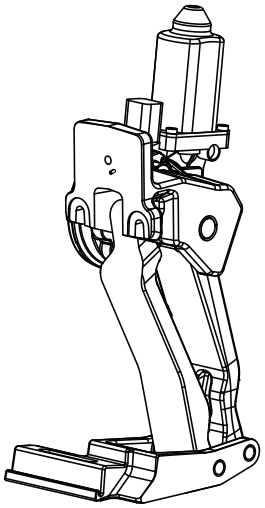

(2b)
10-03656-11
Motor Linkage Assembly - Passenger Side

PARTS LIST AND HARDWARE IDENTIFICATION

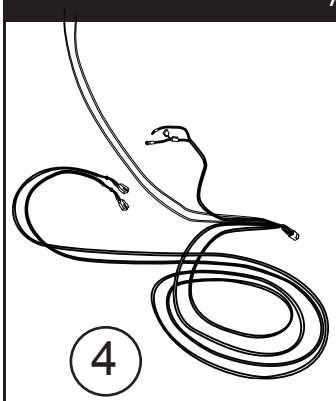

4
19-03695-90L
Wire Harness

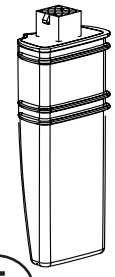

5
19-03297-A06
Type-A
Controller

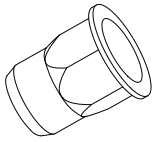

6 x8
19-03829-90
Rivet Nut

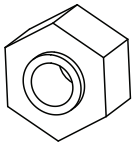

7
19-03205-90
Rivet Nut Tool

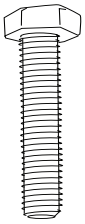

8 x11
19-03326-90
M8 Hex bolt

9 x4
19-03732-90
M6x30 Hex Bolt

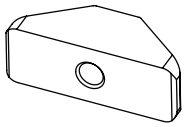

10 x4
19-03730-90
Mounting Insert

11 x9
16-03014-90
Washer (SS)

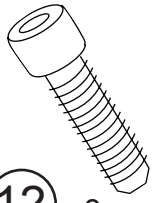

12 x8
19-02802-90
Socket Cap
Screw

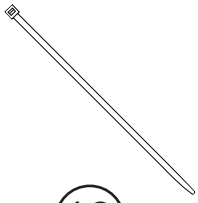

13 x20
19-02805-90
Cable Tie (7”)

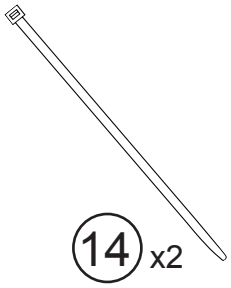

14 x2
19-03339-90
Cable Tie (11”)

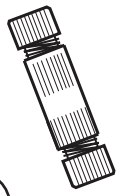

15 x4
19-03354-90
Posi-Tap™
Connector

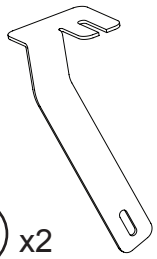

16 x2
16-03733-90
Support Bracket
(not for Mega Cab)

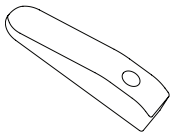

17 x2
17-02777-90
Bracket Insert
(not for Mega Cab)

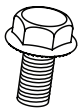

18 x2
19-03037-90
M8 Flange Bolt
(not for Mega Cab)

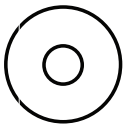

19 x2
19-02389-90
Large Washer
(not for Mega Cab)

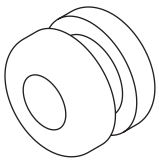

20 x4
19-02640-90
Grommet

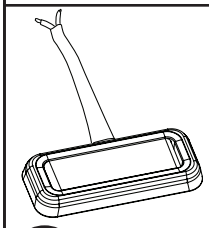

21 x4
19-03302-90
LED Lamp

22 x8
19-02989-90
Butt Connector

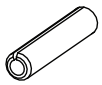

23 x2
19-03729-90
Roll Pin

FOR QUAD CAB ONLY.

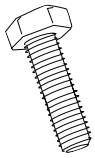

24
19-02849-90
Short Hex Bolt

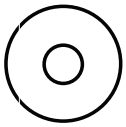

25
19-02389-90
Large Washer

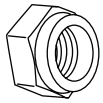

26
10-00115-60
Nylock Nut

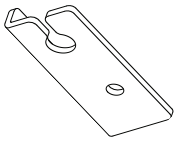

27
16-03701-90
Bracket

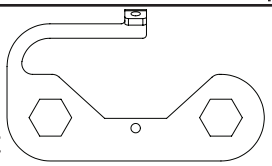

28 x4
16-03789-90
Reinforcement Bracket

29 x4
19-02784-90
Blind Rivet

NOTE: 1500 Quad Cab installations require additional steps and come with the required additional hardware. (These parts will not be available in Crew Cab kits.) Please read and carefully follow the instructions in Step 1 for your vehicle model.

1500 QUAD CAB

Follow Steps 2-5 to relocate brake cable and then proceed with the Power Step installation.

1a

1500 CREW CAB & ALL 2500/3500 MODELS

Skip to Step 6 and proceed with the Power Step installation. Relocation of the brake cable is not neccessary on Crew Cabs.

1b

While holding brake cable adjustment nut with wrench (located on driverside along frame, towards the rear), loosen brake cable to allow for slack. Mark position of nut before loosening.

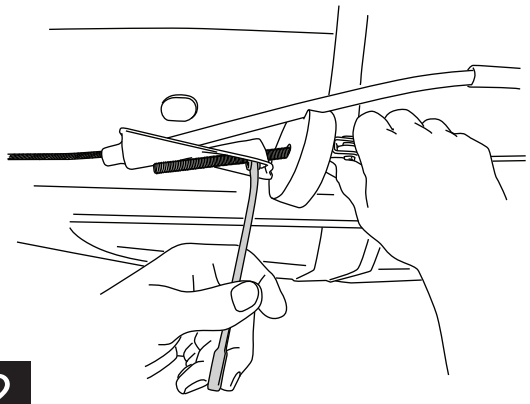

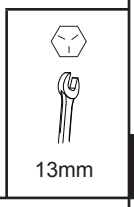

2

After gaining enough slack, detach brake cable as shown below. This detachment point is located just to the rear of the adjustment nut.

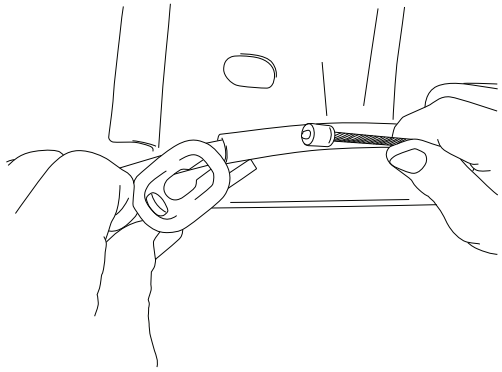

3

Remove brake cable guide from frame by depressing locking tabs and sliding guide out through hole. Unthread brake cable from frame mount.

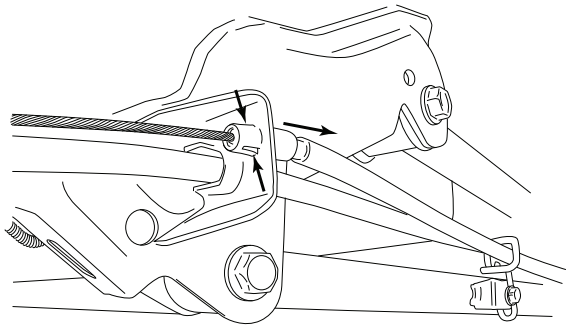

4

Attach brake cable guide to supplied Brake Cable Bracket (23) and mount bracket with supplied hardware. Reattach brake cable and readjust brake cable adjustment nut to original position.

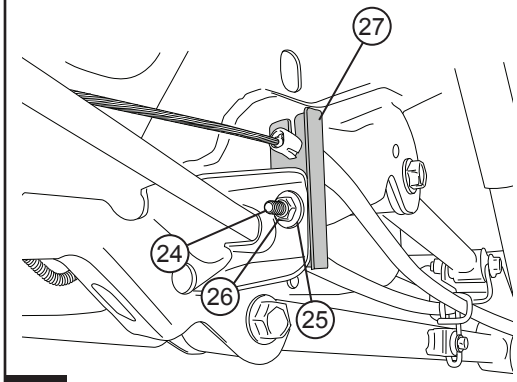

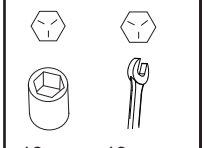

5

HARDWARE MOUNTING OVERVIEW (passenger side shown)

Locate forward most and rearward most mounting provisions on inner sill of truck. Remove tape from sill drain hole at both mounting points.

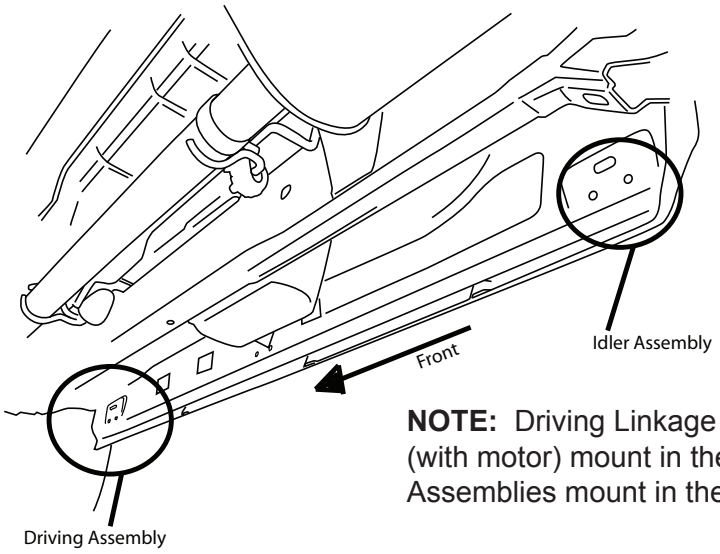

NOTE: Driving Linkage Assemblies (with motor) mount in the front; Idler Assemblies mount in the rear.

6

Set Reinforcement Plate in place and locate with rivet nuts. Drill hole using an 1/8" drill bit. After drilling apply paint to prevent rusting

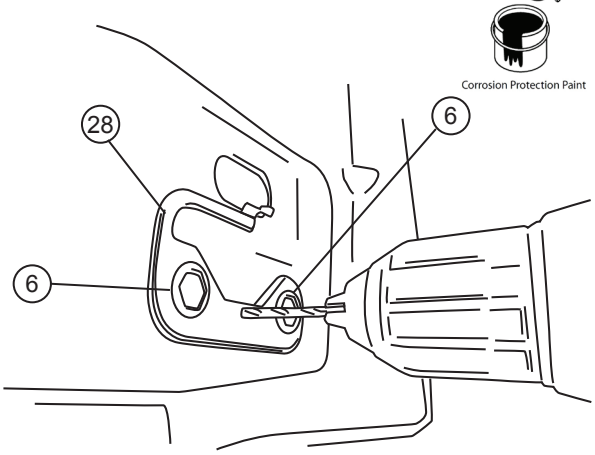

7

Once hole is drilled insert a piece of string or wire through hole in Reinforcement Plate. Set plate into position.

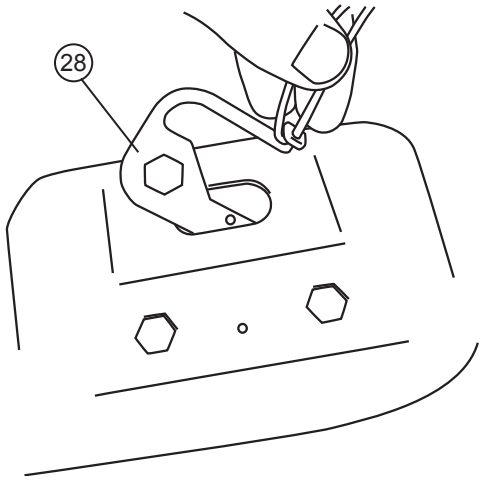

8

Set rivet nuts into place for alignment. Insert pop rivet through hole in plate and secure in place. Once pop rivet is installed remove string or wire from Reinforcement Plate. **NOTE: Verify plate is pulled flush to the body before securing pop rivet.**

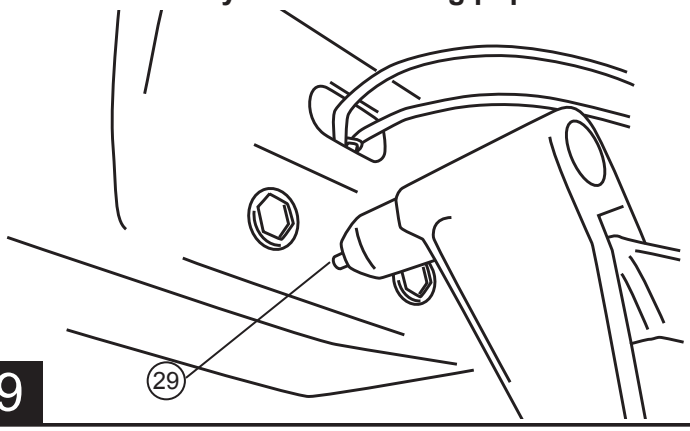

9

Assemble Hex Bolt (lubricated with soapy water), Washer, Rivet Tool, and Rivet Nut together as shown and place into hex cutouts in sill. An extra Hex Bolt and M8 Washer is supplied to install rivet nuts.

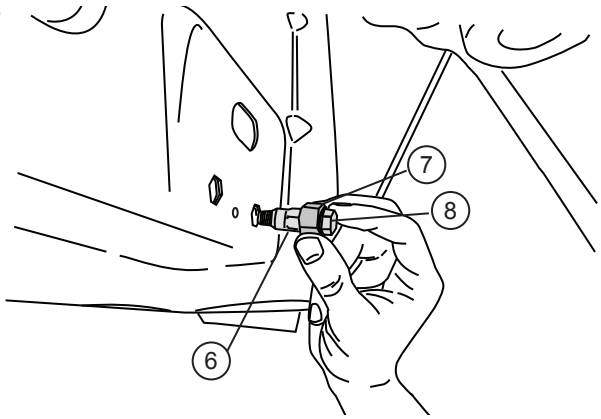

10

With Rivet Nut Tool held in place with 19mm wrench, tighten Hex Bolt until Rivet Nut deforms and secures itself to the sheet metal (110 in-Lbs. or 4 turns). Remove Hex Bolt and Rivet Nut Tool. Repeat for each of the four mentioned mounting locations.

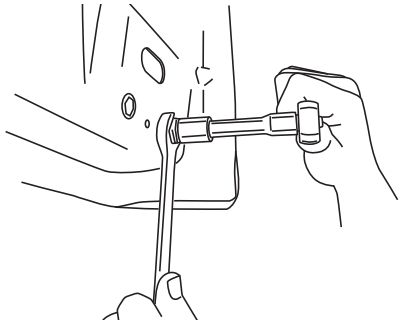

WARNING: Rivet Nuts not properly collapsed will not hold securely to sheet metal.

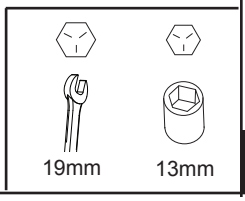

11

NOTE: Hold Rivet tool with wrench while loosening bolt.

Once rivet nuts are in place use a screwdriver to push back tab in hole to avoid interference with linkage mount. Next start M8 Hex Bolts and Washers into installed Rivet Nuts, leaving about 1/2 inch of thread. Make sure washers remain flush to bolt

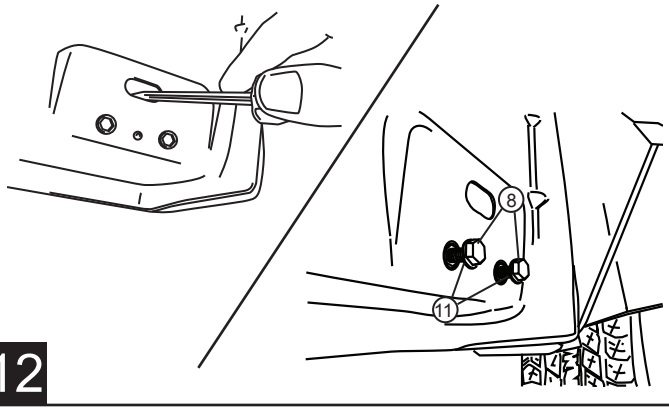

12

With linkage assembly in hand, insert Hex Bolt and rotate as shown to orient Mounting Insert correctly. Make sure Insert remains in this orientation during next step.

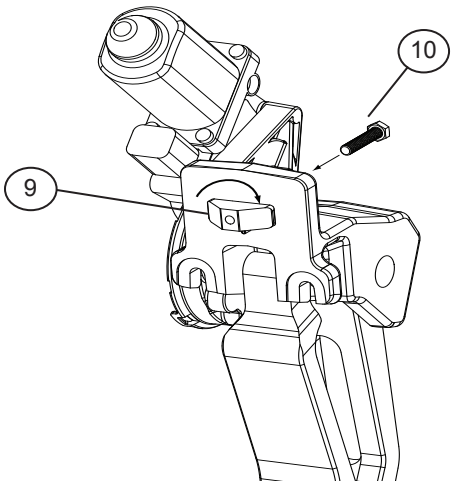

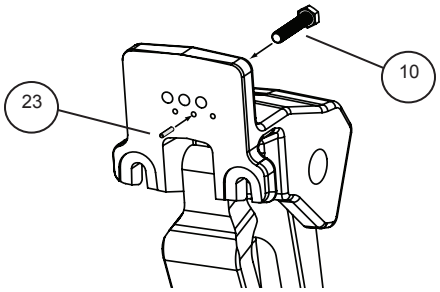

Idler Hex Bolt and Pin Location: Insert Pin into appropiate hole as indicated on label. The bolt will use the corresponding hole (right, left, or center).

13

Linkage Installation. With Linkage tilted back as shown and Mounting Insert still oriented correctly, hook two mounting slots of Linkage onto the pre-mounted Hex Bolts.

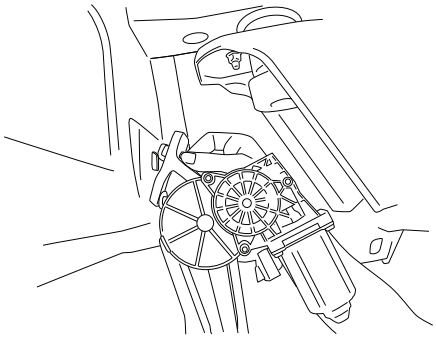

NOTE: Linkage needs to be partially retracted to install.

14

Tilt Linkage forward, dropping Mounting Insert into sheetmetal slot, and tighten M6 Hex Bolt to 6 ft-lbs. Do not allow bolt to rotate counter-clockwise, as this may disengage Mounting Insert. Then tighten lower Hex Bolts to 16 ft-lbs with 13mm wrench.

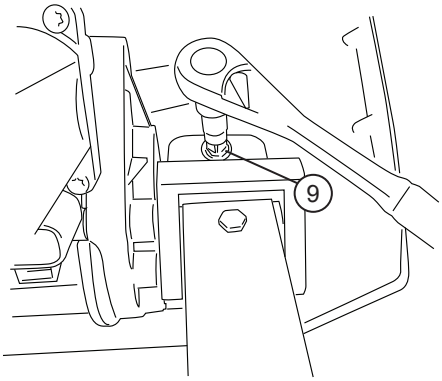

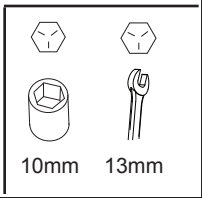

15

The jogs in the lower part of the linkages point toward one another, as shown, Drive (motor) Linkage in the Front and Idler Linkage in the Rear. Note: Linkage position described in parts list on page 3.

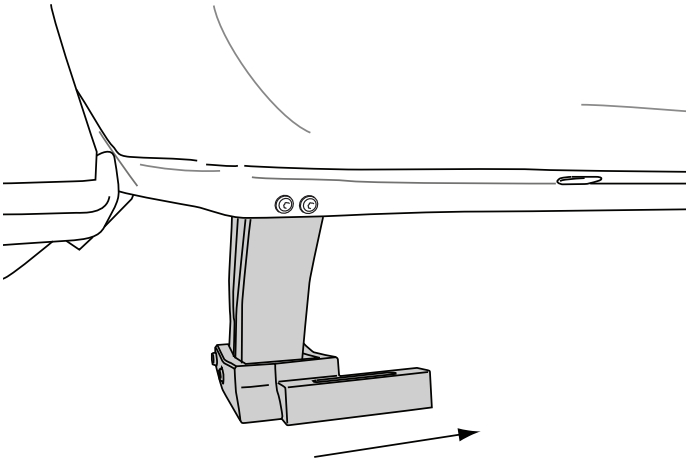

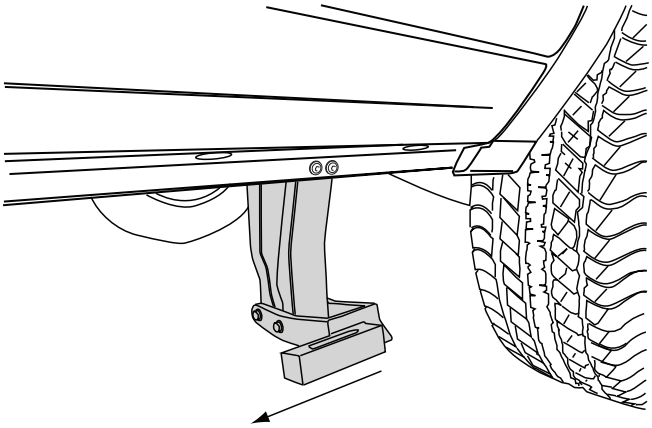

16

Slide mounting T-Nut of board into position and attach to linkages. The end of board/end cap will allign flush with Rear Linkage.

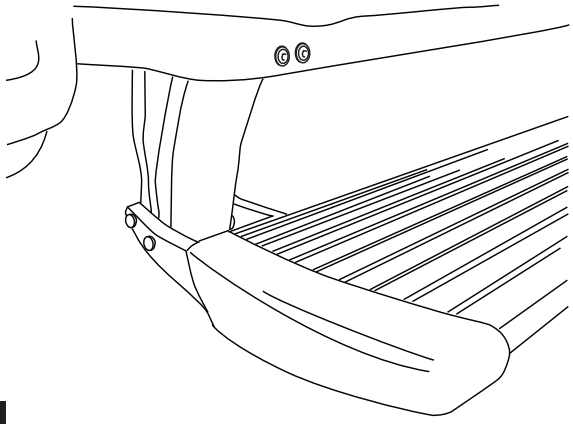

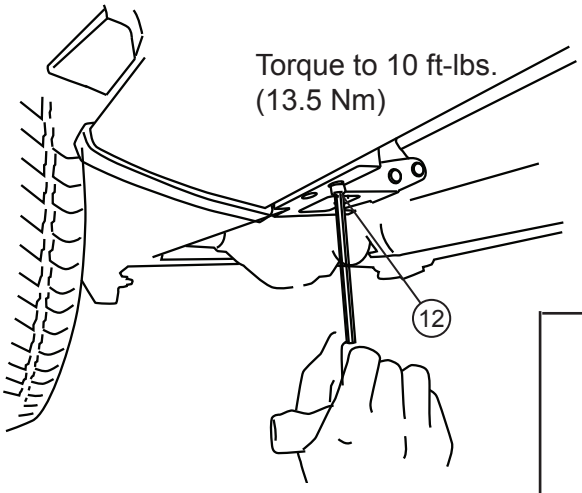

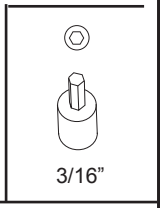

17

NOTE: Skip steps 18-22 on Mega Cab models. Mega Cab models do not take Support Bracket.

Rear Support. Preassemble Bracket Insert with Hex Bolt and Washer and insert into body support member above Idler Linkage.

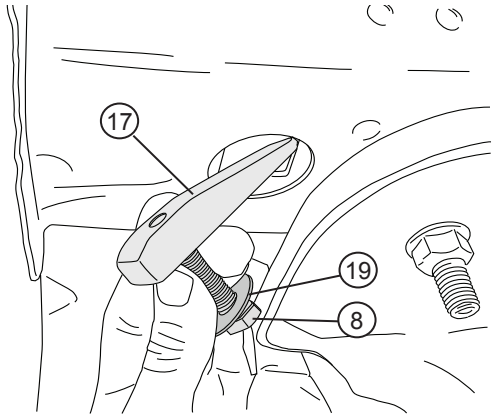

18

SEE MEGA CAB NOTE ABOVE

Position Bracket Insert assembly with the long end of the insert pointing toward the center of the truck (inboard) leaving enough threads for bracket installation.

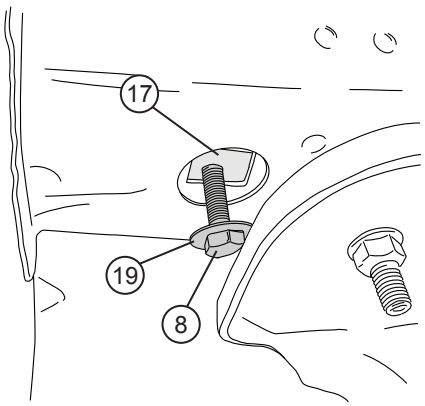

19

Position Support Bracket as shown below, resting against rear face of Idler Linkage and slotted end around hanging bolt and washer from step 16.

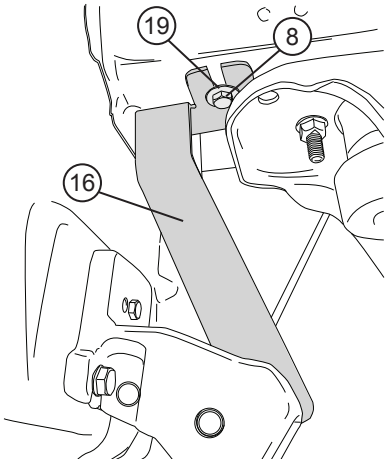

20

With Support Bracket flush to the sheet metal and upper Hex Bolt snug, shift bracket until slot lines up with the threaded hole. Insert Flange Bolt.

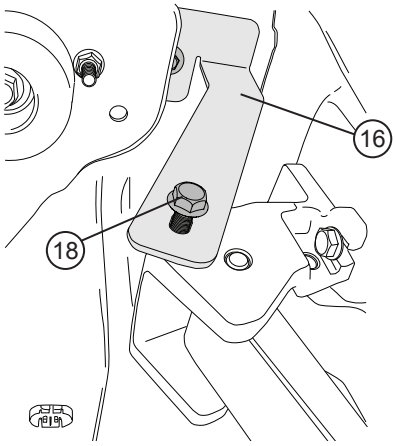

21

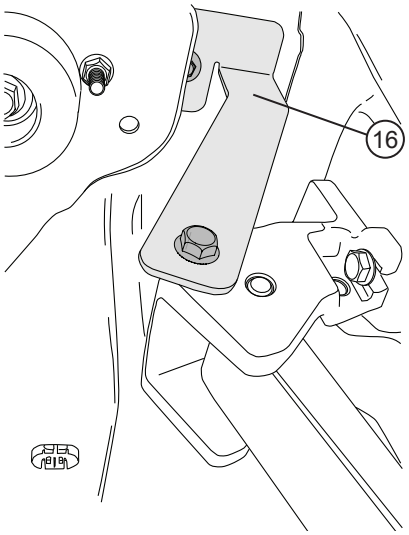

With bolts snug and bracket squarely mounted to truck sheet metal and Linkage Assembly, tighten both Hex Bolts to 16 ft-lbs with 13mm wrench or socket.

Torque to 16 ft-lbs.
(22 Nm)

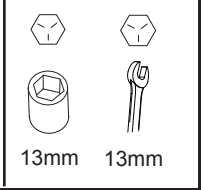

22

Prepare large tie-wraps for mounting Power Step Controller. Loosely loop tie-wraps around large bundle of wires behind battery in engine compartment.

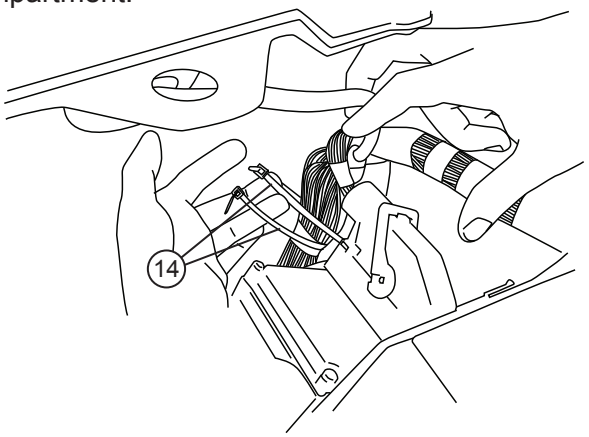

23

Insert controller into tie-wrap loops and cinch down securely. The tie-wraps should cinch down into channels on controller surface.

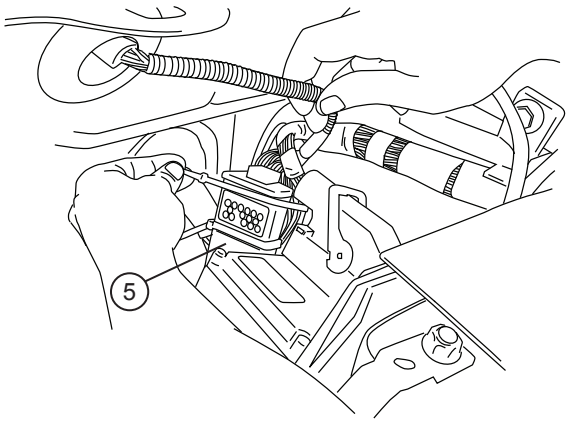

24

Remove fuse from Power Step Wire Harness.

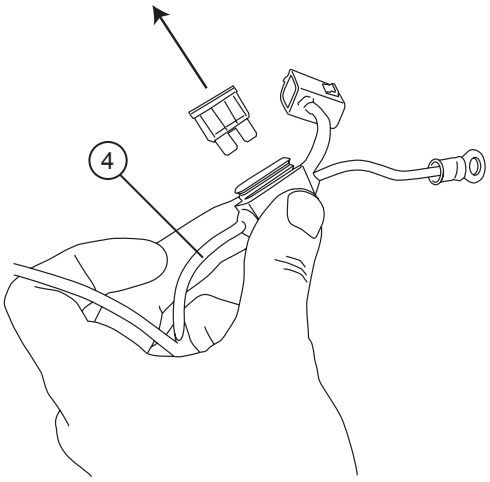

25

Connect power leads from Controller, Red to positive battery terminal and Black to the vehicle body ground as shown.

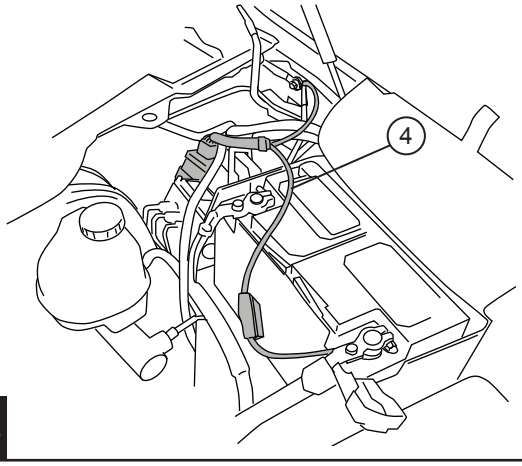

26

Wiring to Door Ajar Wires: Important notes...

Wiring on 2013 RAM 1500 vehicles will follow steps 29-32. Wiring on 2009-2012 RAM 1500 and 2010-2013 RAM 2500/3500 vehicles will follow steps 33-38.

Factory Door Ajar Wire General Location		
Vehicle	2013 RAM 1500	2009-2012 RAM 1500 2010-2013 RAM 2500/3500
Location	Under dash on driver side, on white connector panel, located on three lower connectors.	Driver side front corner of engine compartment, on underside of fuse panel, located on a single connector.

27

Steps 32-35 are for 2013 RAM 1500 models only. Proceed to STEP 36 for all other models.

Locate large rubber wire boot on driver side firewall as shown below. Slice small opening as shown below to run trigger wires through.

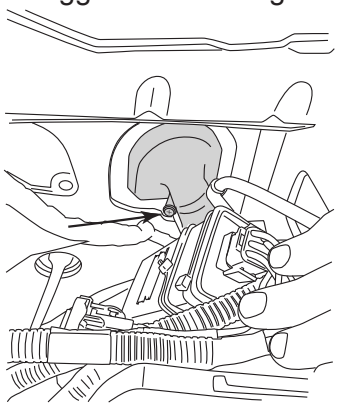

29

Tape leading end of wires together and push through rubber boot to cabin side of the firewall. Silicon lubricant may be used for ease of passage. The trigger wires will come out just above and to the left of the brake pedal.

30

Locate white connector panel against driver side firewall pannel, just behind e-brake pedal. Locate three connectors as shown below and connect Powerstep trigger wires as indicated in the chart.

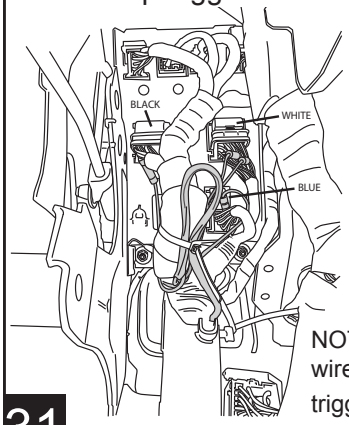

Door Ajar Wire	Wire Color/ Stripe Color	Connector Color
Driver Front	Violet	White
Pass. Front	Violet/White	White
Driver Rear	Violet/ Yellow	Black
Pass. Rear	Violet/Gray	Blue

NOTE: There may be two Violet/Gray wires, but only one will allow steps to trigger with front pass. door.

31

Splice Power Step trigger wires into the Door Ajar wires with provided Posi-Tap™ splicers. The Power Step trigger wires color coordinate with the factory Door Ajar wires. Follow the steps below to correctly splice wires.

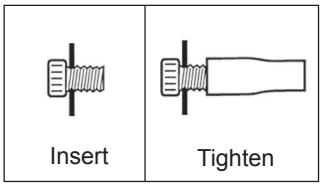

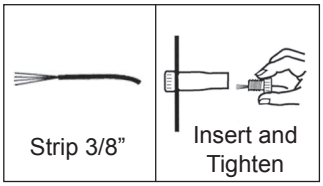

2013 RAM 1500 proceed to STEP 39 after completing this step.

32

Route the trigger wires of Power Step Harness (Purple wires) down toward the fuse box located in front of the battery.

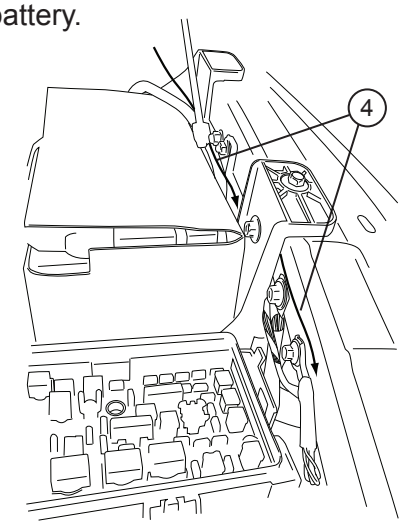

33

Remove fuse box lid and fuse box power lead with 13mm wrench. While depressing release tabs, lift fuse box to view bottom side.

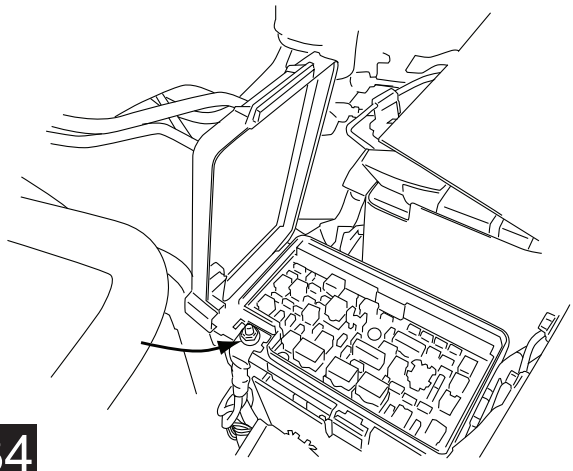

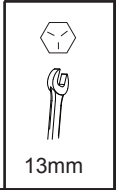

34

Locate and remove Black Connector with Gray latch on bottom side of fuse box (labeled “G” where connected to fuse box).

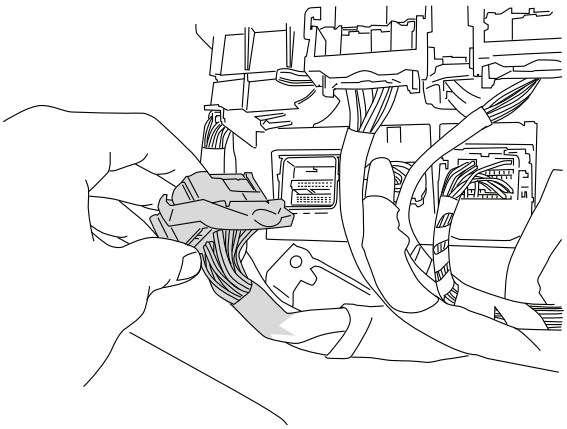

35

Locate the vehicle’s Door Ajar Switch wires on the removed connector as indicated in chart and diagram below according to vehicle model year.

Model Year 2011- UP

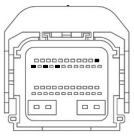

CAVITY	COLOR	FUNCTION
11	VIOLET	DRIVER DOOR AJAR SWITCH SENSE
12	VIOLET / WHITE	PASSENGER DOOR AJAR SWITCH SENSE
16	VIOLET / GRAY	LEFT REAR DOOR AJAR SWITCH SENSE
14	VIOLET / YELLOW	RIGHT REAR DOOR AJAR SWITCH SENSE

Model Year 2009- 2010

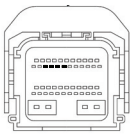

CAVITY	COLOR	FUNCTION
14	VIOLET	DRIVER DOOR AJAR SWITCH SENSE
15	VIOLET / WHITE	PASSENGER DOOR AJAR SWITCH SENSE
16	VIOLET / GRAY	LEFT REAR DOOR AJAR SWITCH SENSE
17	VIOLET / YELLOW	RIGHT REAR DOOR AJAR SWITCH SENSE

36

Splice Power Step trigger wires into the Door Ajar wires with provided Posi-Tap™ splicers. The Power Step trigger wires color coordinate with the factory Door Ajar wires. Follow the steps below to correctly splice wires.

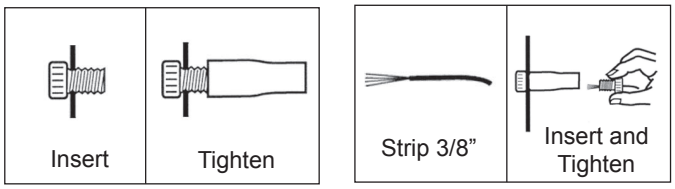

37

With Posi-Taps securely in place, carefully replace connector and drop wire bundles and fuse box back into place. Reattach fuse box power lead that was removed in previous step.

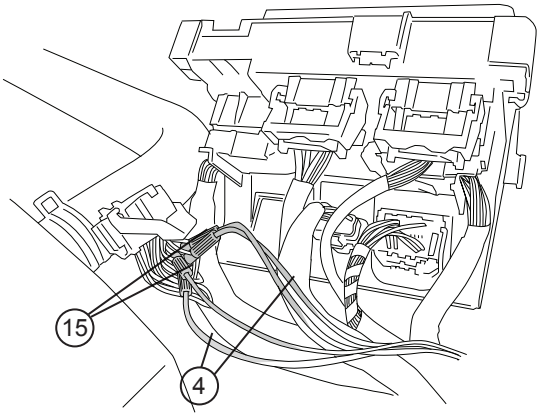

38

Route the two Wire Harness legs down over the wheel wells toward Motor Linkages, long leg across to the passenger side. Secure harness with tie wraps.

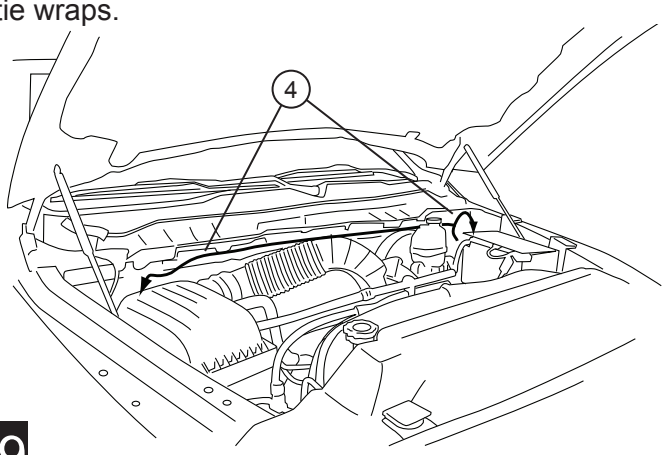

39

On driver side, run Wire Harness leg down and along underside of the vehicle floor and frame to front Drive Linkage. Connect harness to motor and secure harness with tie wraps. Route remainder of wire harness towards rear linkage assembly for LED lights

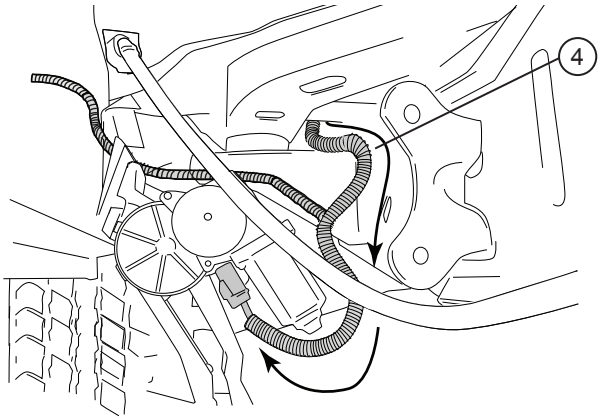

40

On Passenger Side, run Wire Harness leg down and along underside of the vehicle floor and frame to front Drive Linkage. Connect harness to motor and secure harness with tie wraps. Route remainder of wire harness towards rear linkage assembly for LED lights

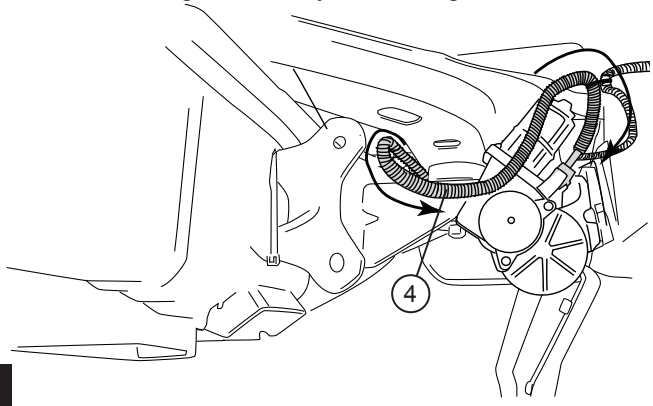

41

On each side of the vehicle measure from the front edge of door line on the pinch weld to the specified lenghts below. Measure at 22” for the front LED Light and 64-3/4” for the rear LED Light.

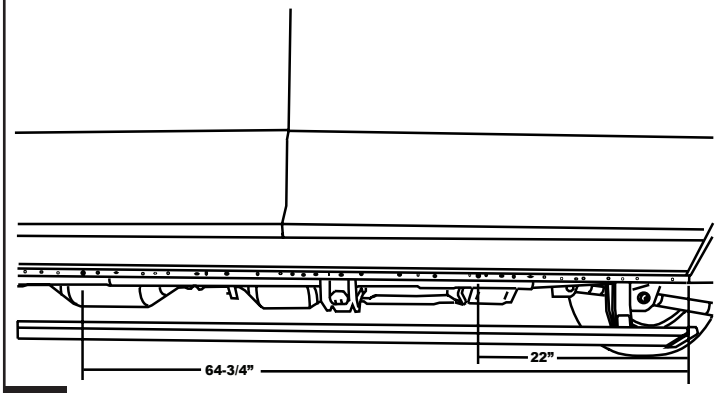

42

Drill a 9/32” hole through the pinch weld at marked locations. Debur all holes. After drilling holes apply paint to prevent rusting.

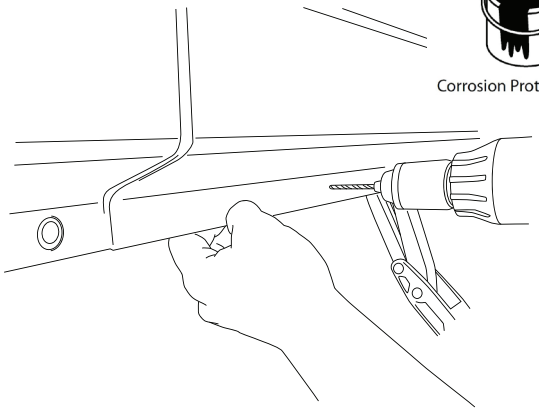

43

Insert grommet into drilled holes. Insert lamp wires through the grommets. (Silicon lube will help wires slip through grommets.)

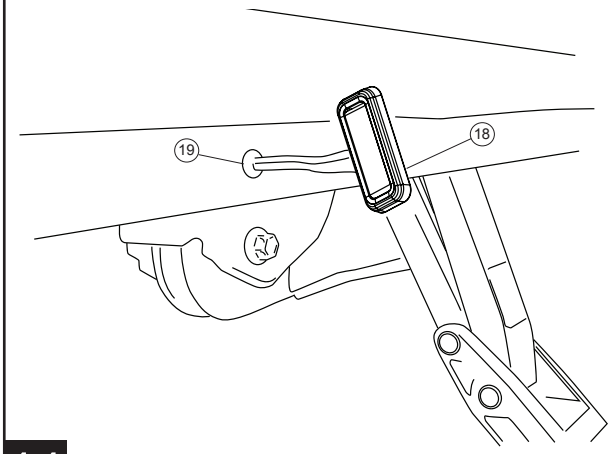

44

Affix lamp to rocker panel surface. Make sure lamp is affixed to a flat, clean surface.

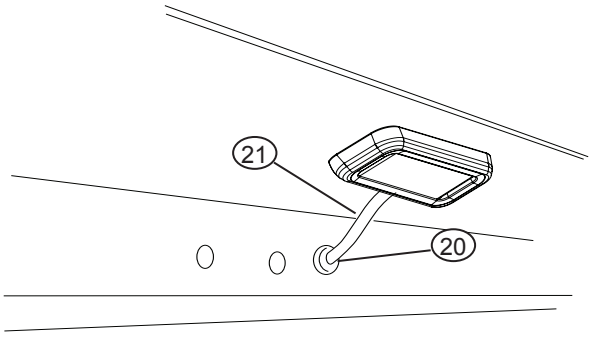

45

Using supplied butt connectors, connect the lamp wires. Red to Red, Black to Black

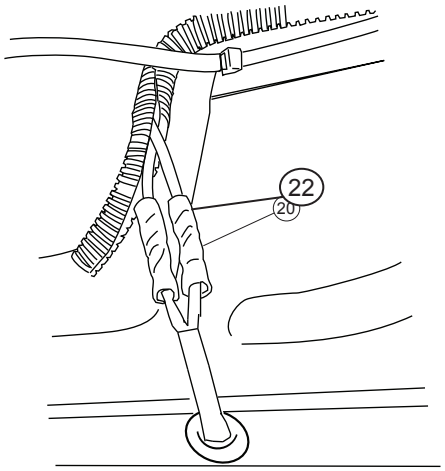

46

Close and wrap with conduit and electrical tape. Secure all loose wires with cable ties, with lamp wires pulled upward to avoid any wire snagging.

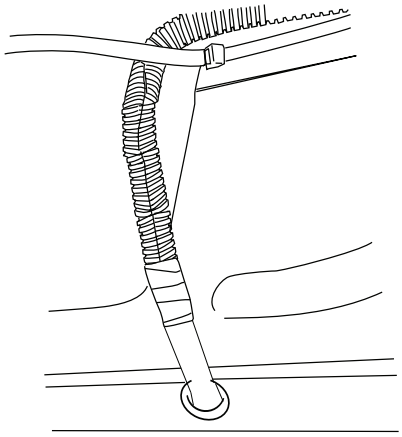

47

Reinstall fuse.

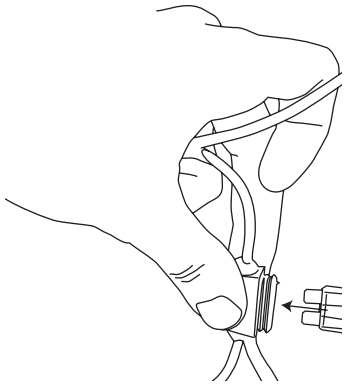

48

Check that all doors activate the Power Step and the LED Lights work when doors open and close. Reinstall any remaining trim panels.

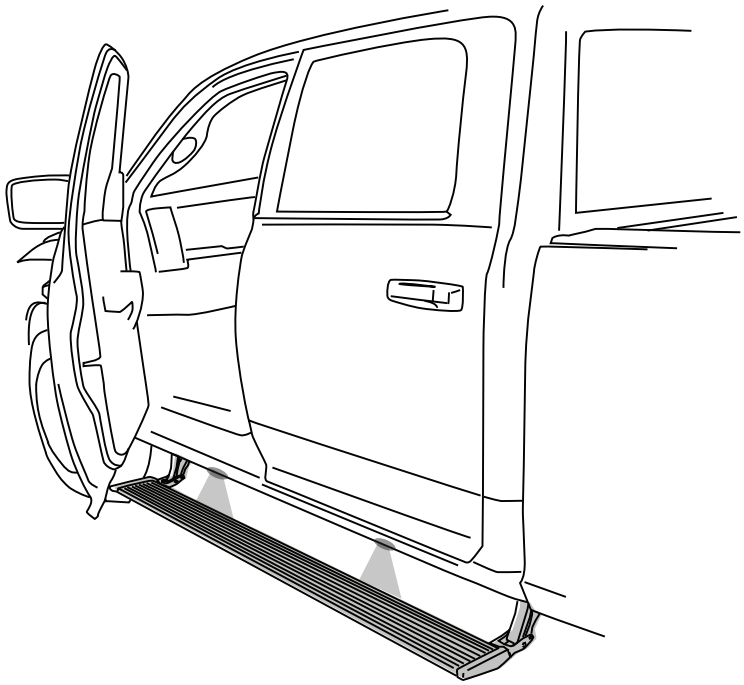

FINAL SYSTEM CHECK

Check that all doors activate the PowerStep and the LED lights work when doors open and close.

NORMAL OPERATION: When the doors open, PowerStep automatically deploys from under the vehicle. When the doors are closed, PowerStep will automatically return to the stowed/retracted position. ***Note that there is a 2-second delay before the PowerStep returns to the stowed/retracted position.***

CORRECT OPERATION OF LIGHTS: All four lamps will illuminate upon opening any door of vehicle. Lamps will stay on until restowing of both Power Steps or until 5 minutes has expired with the doors open. When the lights timeout after 5 minutes, they can be reillumintated by closing and opening any door of vehicle.

AMP RESEARCH PowerStep™

Congratulations on your purchase of the genuine AMP Research PowerStep! Here's what you should know...

POWER-DEPLOYABLE RUNNING BOARDS OPERATION: AMP Research PowerStep running boards automatically move when the doors are opened to assist entering and exiting the vehicle.

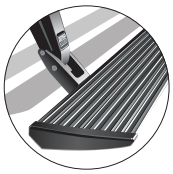

Automatic power deploy:
The running boards will extend down and out when the doors are opened.

Automatic power stow:
The running boards will return to the stowed position when the doors are closed. There will be a 2-second delay before the running boards move to the stowed position.

Automatic stop:
If an object is in the way of the moving running board, the running board will automatically stop. To reset, clear any obstruction, then simply open and close the door to resume normal operation.

Manually set in the deployed (OUT) position for access to the roof:
The running boards can be manually set in the deployed position by firmly holding the step down with your foot while at the same time closing the door. To resume normal operation, open and close the door.

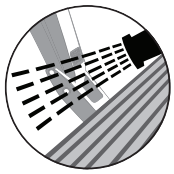

Maintenance: In adverse conditions, debris such as mud, dirt, and salt may become trapped in the running board mechanism, possibly leading to unwanted noise. If this occurs, manually set the running boards to the deployed position and flush the front and rear hinge arms with a high-pressure car wash wand. Avoid spraying the motors directly. After washing, apply silicone spray lubricant to the hinge pivot pins. Do not apply silicone, wax or protectants like Armor All® to the running board stepping surface.

Caution! Keep hands away when the running board is in motion.

5-YEAR LIMITED WARRANTY

AMP RESEARCH warrants this product to be free from defects in material and workmanship for FIVE (5) YEARS FROM DATE OF PURCHASE, provided there has been normal use and proper maintenance. This warranty applies to the original purchaser only. All remedies under this warranty are limited to the repair replacement of the product itself, or the repair or replacement of any component part thereof, found by the factory to be defective within the time period specified. The decision to repair or replace is wholly within the discretion of the manufacturer.

This warranty specifically excludes labor. If you have a warranty claim, first you must call our factory at the number below for instructions. You must retain proof of purchase and submit a copy with any items returned for warranty work. Upon completion of warranty work, if any, we will return the repaired or replaced item or items to you freight prepaid. Damage to our products caused by accidents, fire, vandalism, negligence, misinstallation, misuse, Acts of God, or by defective parts not manufactured by us, is not covered under this warranty.

ANY IMPLIED WARRANTIES OF MERCHANTABILITY AND/OR FITNESS FOR A PARTICULAR PURPOSE CREATED HEREBY ARE LIMITED IN DURATION TO THE SAME DURATION AND SCOPE AS THE EXPRESS WRITTEN WARRANTY. OUR COMPANY SHALL NOT BE LIABLE FOR ANY INCIDENTAL OR CONSEQUENTIAL DAMAGE.

Some states do not allow limitations on how long an implied warranty lasts, or the exclusion or limitation of incidental or consequential damages, so the above limitations or exclusions may not apply to you. This warranty gives you specific legal rights, and you may also have other rights that vary from state to state.

FOR WARRANTY ISSUES WITH THIS PRODUCT PLEASE CALL AMP RESEARCH CUSTOMER SERVICE 1-888-983-2204

WARNING

Be sure to read and precisely follow the provided instructions when installing this product. Failure to do so could place the vehicle occupants in a potentially dangerous situation. After installing or reinstalling, re-check to insure that the product is properly installed.