DOWNLOAD COLOUR INSTALL MANUALS AT www.bddiesel.com

BD Dodge CUMMINS Heavy Duty EXHAUST MANIFOLD

Installation Instructions

1045965	**2007-18 6.7L Manifold**
1046065	**2007-18 6.7L Manifold Complete Kit**

PLEASE READ ALL INSTRUCTIONS BEFORE INSTALLATION

Replaces Chrysler # 68027070AA, 68027070AB, 68210184AB
Replaces Cummins # 5301441

KIT CONTENTS:

Please check to make sure that you have all the parts listed in this kit **before** you start the disassembly of your truck.

Common Kit Contents - 1045965 & 1046065

1405967-HE	HE351 Flange Dimensions
	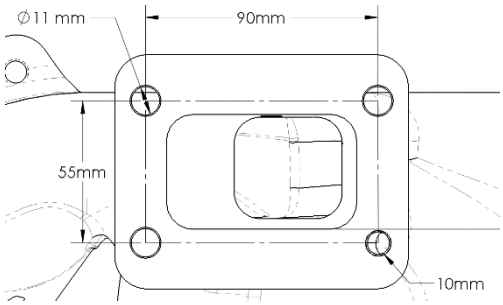
Manifold	
Qty: 1	

1462431	1462430	1200208	1462441
Stud M10-1.5 X 025	*Stud M10-1.5 X 030*	*Plug 1/8" NPT*	*Nut M10-1.5*
Qty: 4	Qty: 3	Qty: 2	Qty: 7

Additional Kit Contents – 1046065 Only**

1405900	1405902	4933225	5260648
Manifold Gaskets	*EGR Gasket – Rear*	*EGR Gasket – Front*	*Turbo Gasket*
Qty: 6 pack	Qty: 1	Qty: 1	Qty: 1

1405937	FK-1045982		
Bolt Spacer	*M10 x 60*	*M10 x 35*	*M10 Washer*
Qty: 12	Qty: 12	Qty: 2	Qty: 2

Options

Description	Part #
Dodge 6.7L Throttle Sensitivity Booster 2007-2014	BD # 1057932
Exhaust Manifold Gasket Kit 2008-2018 OEM Turbo	BD # 1045992

Removal

1. Disconnect the battery negative cables. Drain the coolant. Raise and secure vehicle on hoist.

2. Next unplug the stepper (servo) motor connector and remove the two bolts (8mm) that hold the motor to the stepper motor bracket. Then release the cable to remove the motor from the vehicle.

3.Loosen the two nuts to remove the upper heat shield. (10mm)	
4.Remove the air box and intake hose. Remove the air filter inlet hose from the turbo inlet.	

5. Remove the top bolt from the lower heat shield (10mm) then the other two (8mm) bolts to release the lower heat shield.

6. Remove the three bolts for the stepper motor bracket (10 mm) socket and prop the bracket on the cooler.

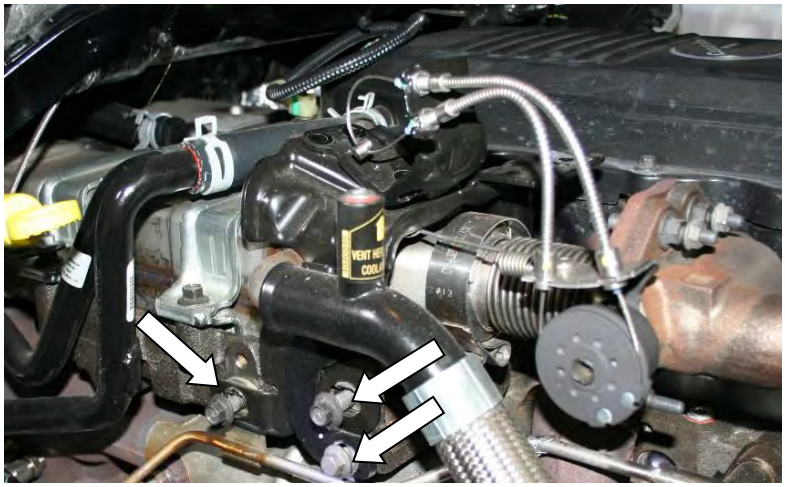

7.Loosen the clamp (11mm) that connects the EGR Flow Direction Valve to the cooler and slide the clamp towards the valve.	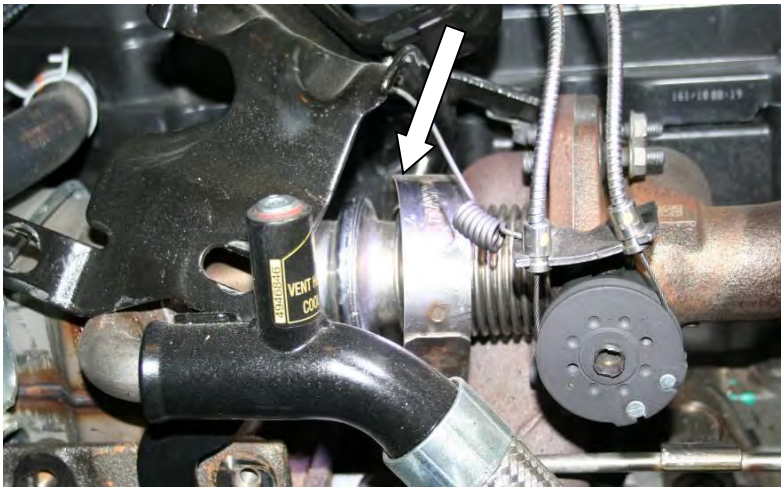
8.Using a (15mm) socket remove the outer nut for the exhaust flange of the flow valve at the manifold. Using a socket with swivel or a wrench, remove the inner nut from the other side of the flange.	

9.Remove the EGR flow direction valve from the vehicle.	
10.Remove the bolt that holds the CCV hose to the cooler then disconnect the clamp at the valve cover to remove the hose assembly.	

11. Remove the four bolts for the cooler and the nut that holds the transmission dip stick tube in place. Then nudge the tube out of the way to access the nut under the dip stick bracket.

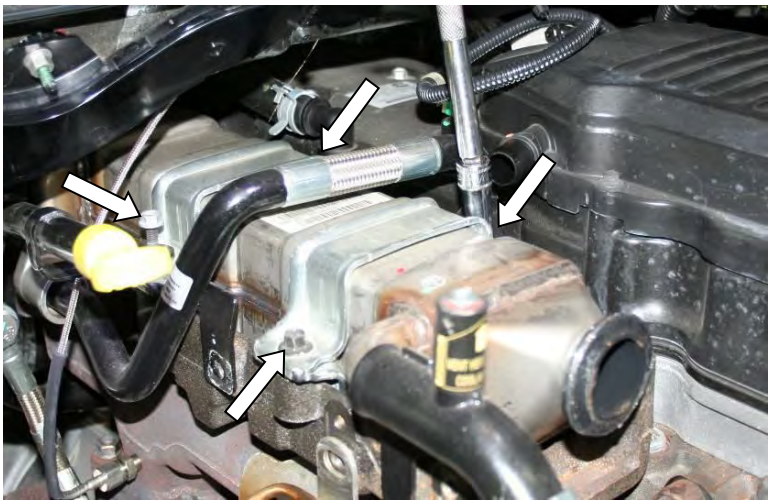

12. Remove the EGR coolant hose from the cylinder head to the cooler. (All bolts should be already removed) the hose is held in by orings. Remaining coolant will drip out. ***optional*** Plug the cooler to avoid further drainage.	
13. Remove the coolers two rear bolts that attach it to the exhaust system (15mm)	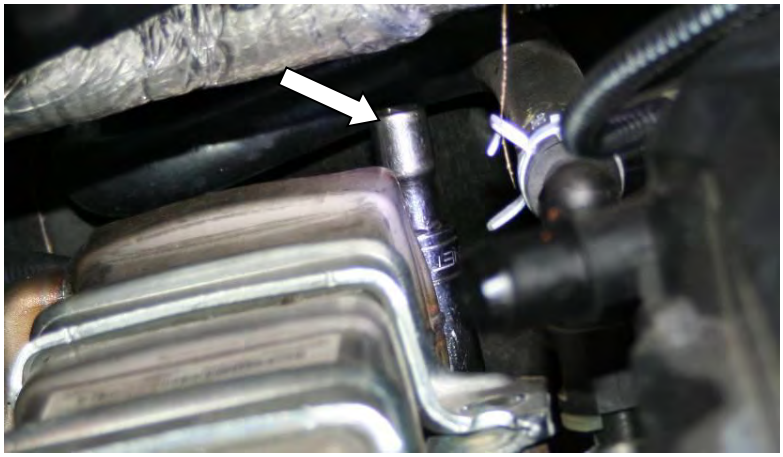
14. Prop the cooler above the studs and push towards the cab holding the other coolant hose to release the oring fitting to remove the cooler from the vehicle.	

15. Remove the cooler mount bolts to the head (13mm socket) and remove the cooler mount from the vehicle.

16. Remove the delta-P line bracket capscrew nuts and remove the delta-P line from the exhaust manifold and thermostat housing.

17. Remove the heat shield and noise panel (if equipped) from the exhaust manifold

18. Remove the coolant lines from the turbo, then remove the oil feed & oil drain lines. Disconnect the down pipe. Disconnect the CAC at the turbo outlet. Remove the four turbocharger mounting nuts to remove the turbo.

19. Remove the two (2) rear exhaust manifold cap screw lock plates.

20. Remove the Cab Heater tubing/bracket from the exhaust manifold stud.

21. Remove the exhaust manifold.

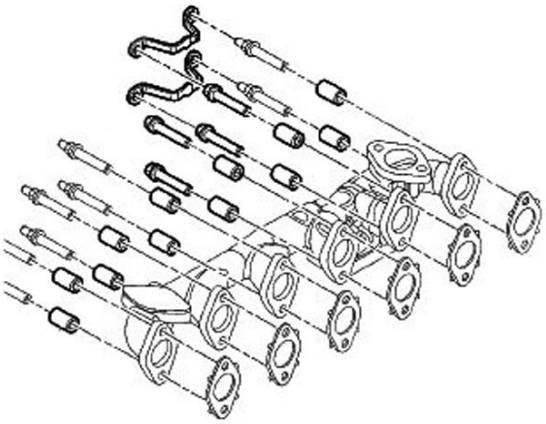

Installation

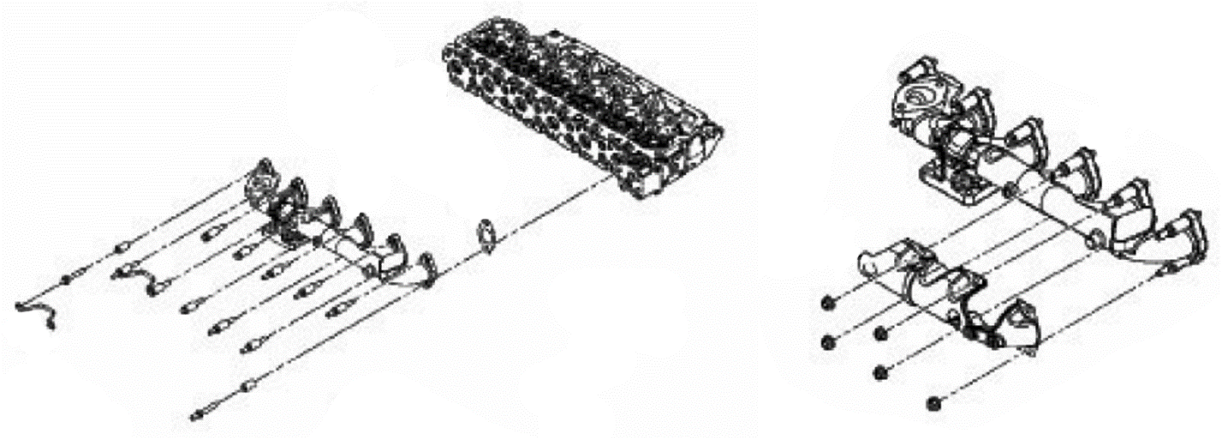

1. Clean the cylinder head exhaust port gasket surfaces.
2. Install supplied studs into BD manifold (see table below for locations)

HE351Manifold
(4x) 1462431 - In EGR port locations
(1x) 1462430 - In turbo mount threaded hole (2x) 1462430 – Lower Exhaust Port #4 and #5

HE351 shown below.

Note the 30mm stud location. All EGR ports use a 25mm long stud

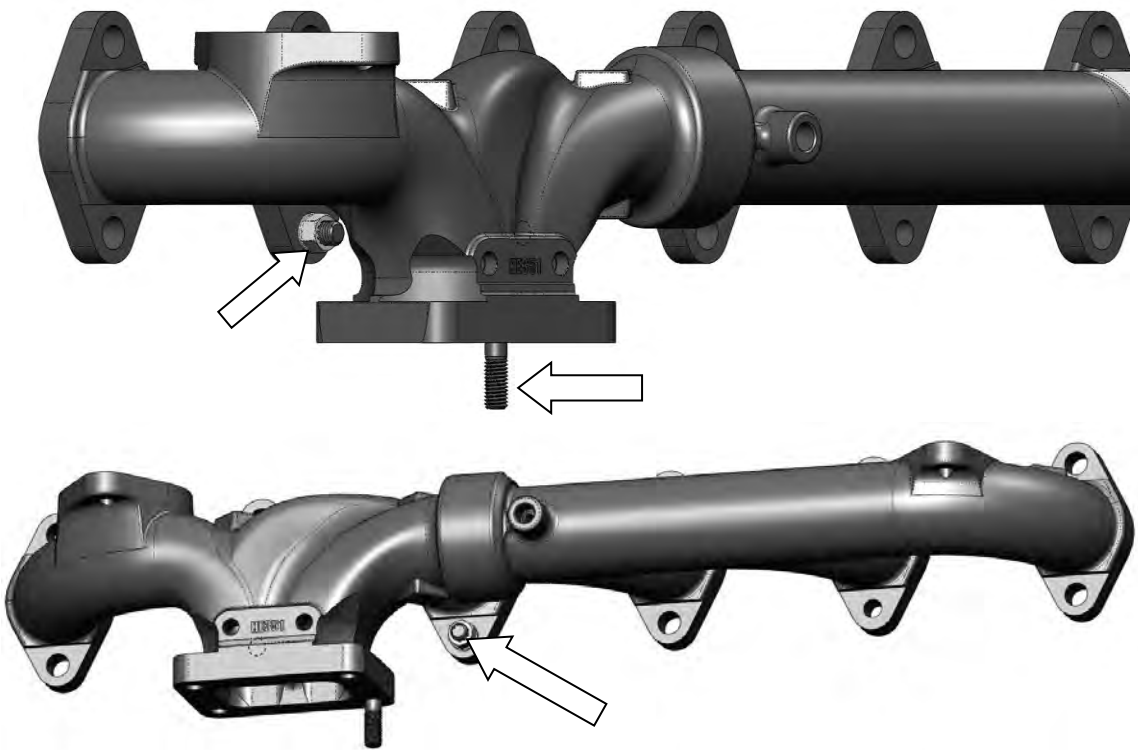

Arrow point to the locations of 30mm studs. All 25mm studs are installed in the EGR ports.

1. Install exhaust manifold with one manifold bolt and the 1462430 studs to hold in place.
    a. Using the supplied M10 x30mm studs, insert the studs at the lower mount of exhaust of cylinders 4 and 5. Lift the manifold into place as use these studs as the support. Don't forget to install the gaskets.
    b. Insert a manifold bolt at the lower threaded mount of cylinder 2 with the gasket. Keep this bolt loose.
    c. You will then need to thread the supplied M10 nuts on the M10 studs you installed earlier. It will be quite a challenge but can be done. You should be able to fit a boxed end wrench on the nut.

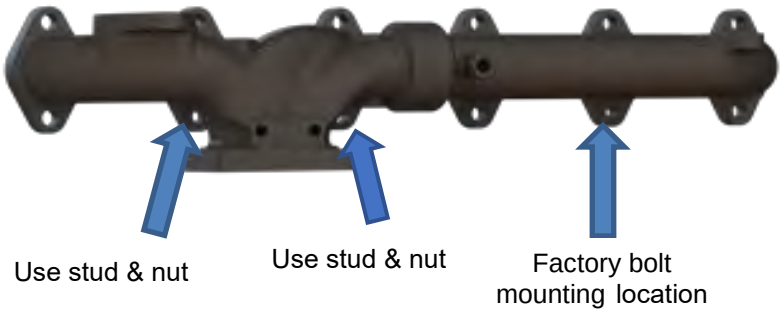

3. The five exhaust manifold cap screws with studs are used at the No. 1 and No. 2 cylinder locations for the heat shield mounting and one on the rear lower corner of the manifold for the cabin heater tube bracket.

4. Install remaining bolts and spacers with new gaskets.

5. Starting from the center and moving in a pattern outward, tighten the exhaust manifold bolts to 43 N·m (32 ft. lbs.)

6. Install the exhaust manifold capscrew lock plates.

7. Install the exhaust manifold heat shields/noise panels. Tighten the mounting nuts to 24 N·m (18 ft. lbs). ***Note you will need to reform the heat shield.***

Please note the **M12 inverted flare port** is for the OEM back pressure sensor.

8. Install the turbocharger, and torque nuts to 43 N·m (32 ft. lbs).

   Important!: Tighten turbo flange in a crisscross pattern, repeating a second time to ensure the gasket is fully compressed and flange is tight. Improper torque can lead to flange leak and gasket failure.

9. Attach the mounting tabs and start the delta-P tube to exhaust manifold and thermostat cap screws.

10. Tighten the delta-P line bracket nut to 24 N·m (18 ft. lbs.).

11. Tighten the delta-P line bracket bolt to 10 N·m (89 in. lbs.).

12. Tighten the delta-P flare nuts to 10 N·m (89 in. lbs.).
13. Install the EGR cooler, using the existing hardware provided. Follow removal of EGR in reverse.
14. Install the air filter housing.
15. Re-fill the water system with coolant.
16. Connect the battery negative cables.
17. Start the engine to check for leaks.
RE-TORQUE ALL BOLTS AFTER AT LEAST ONE HEAT CYCLE