"Perform Service" at 67,500 miles

Let's break the service down into its three components:

Part 1: Change the crankcase vent (CCV) filter
Part 2: Remove and clean the exhaust gas recirculation (EGR) valve
Part 3: Remove and clean the EGR cooler assembly.

Part 1: Change the CCV Filter

The first service item, change the CCV filter, is very easy to do. The instructions were covered in the Turbo Diesel Register, specifically Issue 64, page 40.

In an effort to do a comprehensive "Perform Service" article, this is what we found:

The CCV sits on top of the valve cover and it requires inspection and/or changing every 67,500 miles on '07.5-'18 trucks and every 75,000 miles on '19-'22 trucks. Furthermore, should the crankcase vent system become clogged there are diagnostic trouble codes (DTCs for the uninitiated) that will be set causing a malfunction indicator light (MIL for the uninitiated) to come on. Specifically the DTCs for CCV problems are: P1507 crankcase filter restriction; P1508 crankcase filter restriction—replace filter. If these codes are set the "Perform Service" message will illuminate on the overhead display.

Likewise, at the 67,500 mile interval the "Perform Service" will automatically illuminate alerting you to check and clean the EGR valve, EGR cooler and to replace the CCV filter. This only applies to 2007.5-2012 model trucks.

'13-Current 2500/3500 trucks use the DEF exhaust aftertreatment. Looking closely at their Owner's Manual reveals that a CCV filter change is also required at 67,500 miles on '07.5-'18 trucks and 75,000 miles on '19-'22 trucks. However, the cleaning of the EGR valve and EGR cooler is *not* a requirement. We asked the folks at Cummins and they responded that you may wish to include the cleaning, but it is typically not needed until the second crankcase vent filter change at 135,000 miles. They did suggest an inspection of the EGR valve. "Sooty/dusty is good, shellac/dusty needs to be cleaned." If the valve is shellac/crusty, don't skimp, go ahead and do the entire EGR system cleaning. 2019 and newer EGR valve cannot be cleaned.

How do you change the CCV? The inspection and/or change of the filter is very easy. The steps:

- Remove the four 8mm bolts that hold the "batwing" cover in place. Remove the dipstick and then the cover.
- Remove the oil drain hose from the passenger side of the CCV filter. As you inspect the hose you should find that there is very little oil that makes it this far into the vent system.
- Remove the eight 8mm bolts that hold the CCV filter in place.

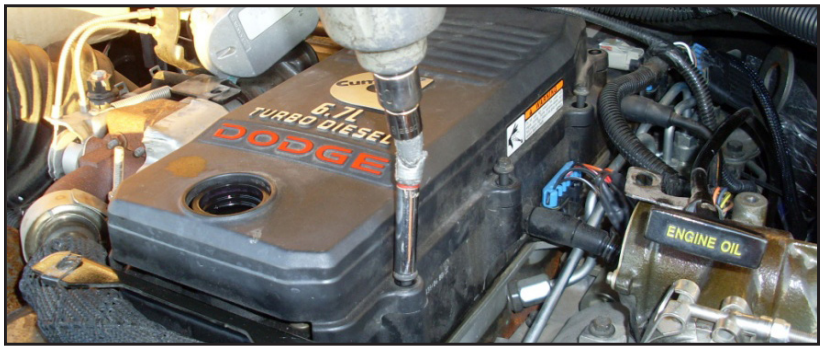

Removing the eight 8mm bolts that hold the CCV filter in place. DO NOT use the impact tool to reassemble and tighten the bolts.

Continued on Next Page ▶

"Perform Service" at 67,500 miles

- Remove the oil fill cap. For protection from debris, stuff a paper towel into the oil fill hole.
- With a large flat blade screwdriver, gently pry the CCV filter up and off.
- Upon inspection of the CCV filter, you'll see that it has two O-rings and a reusable V-gasket that effectively seal the filter in place.

New CCV filter on the left. At 30,000 miles the CCV filter on the right looked clean and was reinstalled.

- Replace the CCV filter.
- Reassemble in reverse order.

Oops…wait one minute, we're not quite finished. How do you reset the "Perform Service" reminder that is now illuminated on your overhead display?

The procedure is outlined in your Owner's Manual and it is written as follows:

- Turn the ignition switch to the ON position. (Do not start the engine.)
- Press and release the brake pedal two times.
- Fully depress the accelerator pedal slowly two times within 10 seconds time.
- Turn the ignition switch to the OFF/LOCK position.

For trucks with the keyless option, reset the reminder as follows. Do this procedure twice and when finished, open and close the door:

- Close door.
- Push button to RUN position.
- Press and release brake pedal 2 times.
- Fully depress the accelerator pedal slowly 2 times within 10 seconds time.
- Turn off the ignition.

The message should now be erased. You can also do your favorite dance afterward!

Geno suggests that you have a beer and toast to your success.

Continued on Next Page ▶

"Perform Service" at 67,500 miles

Part 2: Clean the EGR Valve (2007.5-2018)

2019-up EGR Valve cannot be cleaned.

This service procedure is almost as easy as Part 1, changing the CCV filter. Let's pick up the instructions from the part where you have removed the dipstick and then the four 8mm bolts that hold the "batwing" in place.

- Remove the three 10mm bolts that hold the dipstick bracket in place.
- Next up, remove the electrical connector that goes to the EGR valve. With a small pick move/slide the red clip out allowing you to pinch the tang down to release the connector.
- Next remove the four 10mm bolts that hold the EGR valve in place. Loosen and remove V-band clamp that holds crossover tube to EGR valve. The bolts and the EGR valve can be removed. Lift the EGR valve off of the intake horn and it is ready for cleaning.
- Remove the four Phillips head screws that hold the valve motor to the EGR assembly. Lift the valve motor off.

Several shops that we've talked to suggested that you start the EGR valve cleaning process by blowing the carbon off of the EGR valve with regulated compressed air. Start at 10psi and increase the pressure as the dust flys—and the dust will fly. Your blowing should be done in the wide open spaces or, better yet, blow into an old shop vacuum that you no longer care about.

With the focus on saving you money, we wanted to test the effectiveness of the Mopar cleaning solution versus other cleaners in the market. Way back when we had equal success using Simple Green as the cleaning solution.

In June 2016 the folks at Truck Trend magazine did a bench-test of several other cleaning solutions (www.trucktrend.com/how-to/parts-accessories/1606-we-bench-test-diesel-egr-cooler-cleaning-solutions/). Their study was thorough and it is a great resource as you search for a good cleaner for this and other parts in your shop. Their winner was the least expensive cleaner/degreaser that they tested: Purple Power used in full strength concentration. Other products in the Truck Trend test were the following: Mopar cleaner; Simple Green; Piston Kleen and NAPA Carburetor Cleaner.

Our customers report better success with the Purple Power (thanks Jeffrey Porter).

- Drop the EGR housing and valve into the cleaning solution for an overnight soak.
- Remove and do a preliminary clean-up with a toothbrush.

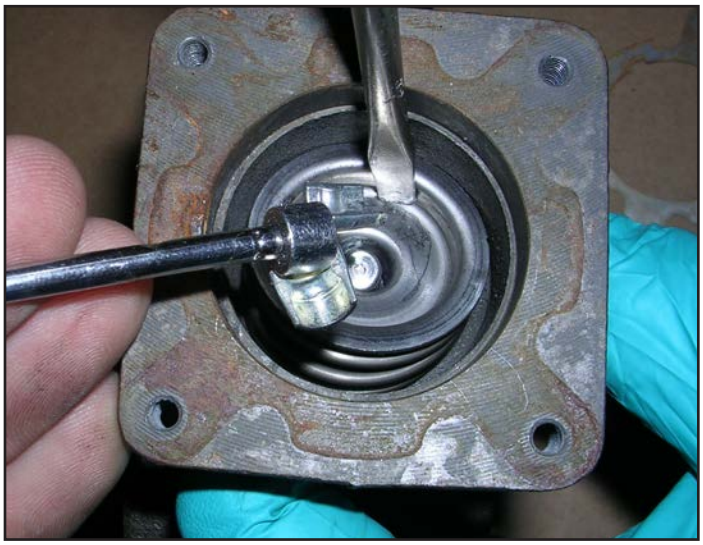

For complete cleaning you'll want to disassemble the EGR valve from the housing. The procedure is as follows:

- Using your fingers, a screwdriver or a socket, press down on the valve spring retainer.
- With the retainer pressed completely down the valve keepers should release from the valve. A light tap with a screwdriver or magnetic pick up tool may be needed.
- Remove the retainer and keepers.
- The valve can now move freely. Clean the valve and the valve seats. We used a toothbrush and a Scotchbrite pad for cleaning.
- Reassemble the EGR valve. The valve motor is not indexed. Reassemble it so that its connector is pointed towards the front of the truck.
- Reassemble the EGR valve back onto the air intake.

Continued on Next Page ▶

"Perform Service" at 67,500 miles

Part 3: Remove and Clean the EGR Cooler

Unlike parts 1 and 2, this service procedure is cumbersome and time consuming. Notice we did not say "difficult," as the procedure is nothing more than removing and reinstalling parts. There is no heavy lifting; precise measuring or alignment; or machine work/outside services for which you have to wait. However, if you look at this procedure in the TDR-o-pedia it exemplifies and gives definition to the word cumbersome.

How so?

Here are some examples: Hidden nuts and bolts that you can't see, nuts and bolts that are difficult to access; nuts and bolts that require removal of other parts (air cleaner assembly) to access; special flexible tools that you'll need to get into the aforementioned tight and awkward locations.

All right, you've been sufficiently warned that the procedure is cumbersome, but not necessarily difficult. Here are some general instructions with tips for easier disassembly.

Our task is to remove and clean the EGR cooler assembly. This is the "before" picture.

This is the "after" picture showing the EGR cooler assembly removed from the exhaust manifold.

- For easier access to the exhaust manifold we started the project by removing the air snorkel that comes from the airbox to the turbocharger inlet. To remove the snorkel you need to disconnect the two sensors, loosen the hose clamps and disconnect the crankcase vent line that goes into the snorkel. To prevent debris from entering the turbocharger, stuff a clean rag into the turbocharger inlet.

Continued on Next Page ▶

"Perform Service" at 67,500 miles

- On the passenger side of the engine, remove the 11mm nut from the clamp that holds the EGR cooler assembly to the exhaust gas crossover pipe.
- Remove the 8mm bolt at the front of the engine that holds the crossover pipe in place. Removing this bolt loosens the crossover pipe giving you room to wiggle the pipe to an out-of-the-way location.

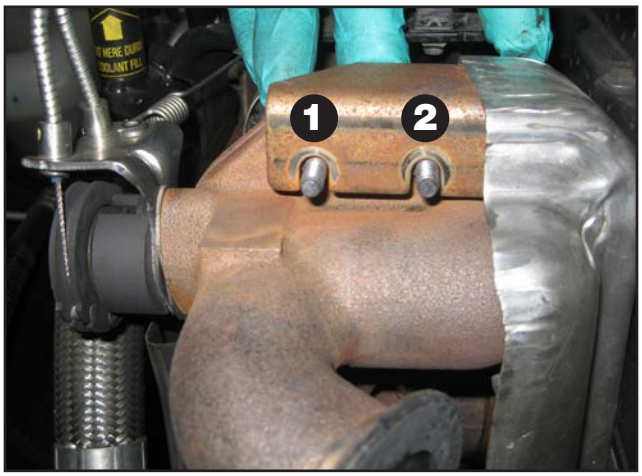

- There is a heat shield above the EGR servo control valve. Remove these two 10mm nuts (#1 and #2) hold the heat shield in place. These two bolts also hold the butterfly onto the 90° elbow.

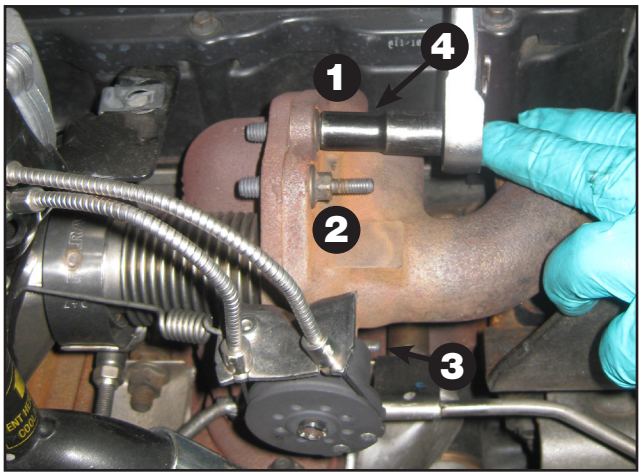

- Remove the top two 10mm bolts (#1 and #2) that hold the cast iron butterfly housing to the 90° elbow.
- Remove the bottom two 10mm bolts (#3 and #4) that hold the cast iron butterfly housing to the 90° elbow.

Continued on Next Page ▶

"Perform Service" at 67,500 miles

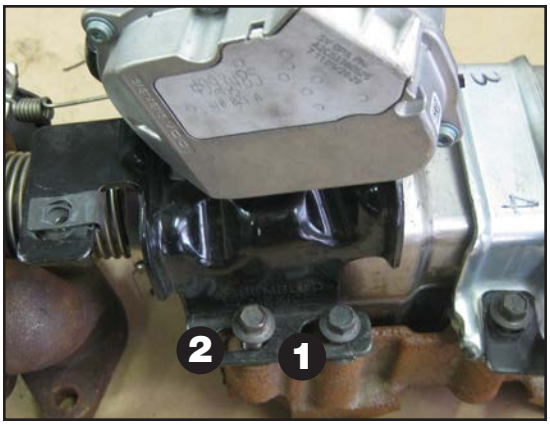

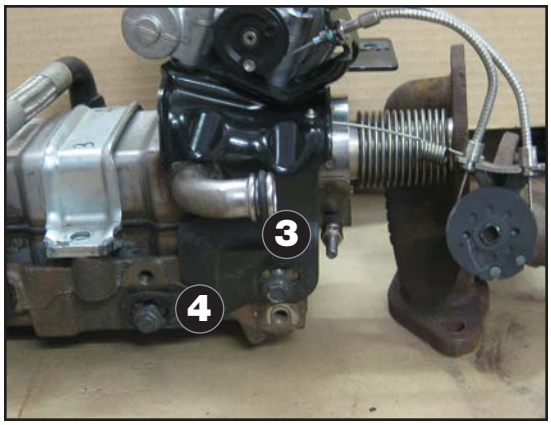

- Remove the four 10mm bolts that hold the servo motor plate to the cast iron butterfly/flex pipe assembly.

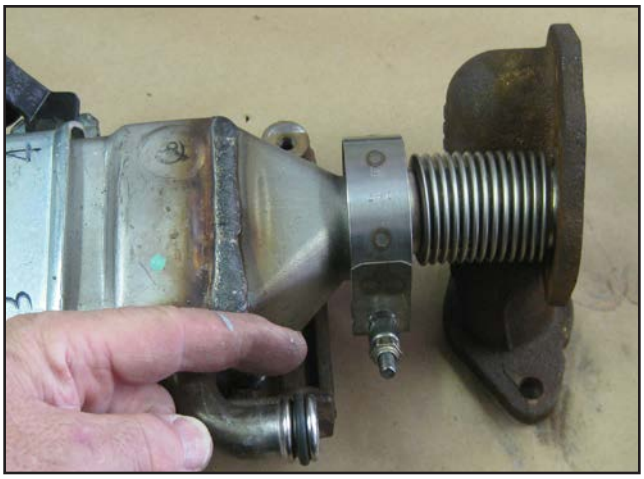

- Loosen the 11mm bolt on the V-clamp. Remove the clamp and the cast iron butterfly/flexpipe to be separated from the EGR cooler.

- Remove two 15mm bolts in order to remove the butterfly/flexpipe from the exhaust manifold.

Continued on Next Page ▶

"Perform Service" at 67,500 miles

- There are several 10mm bolts that hold the front coolant tube to the cooler assembly. Remove the bolts and the coolant tube can be pulled backward from the O-ringed nipple that goes into the cooler assembly. Catch the coolant in a paper cup.

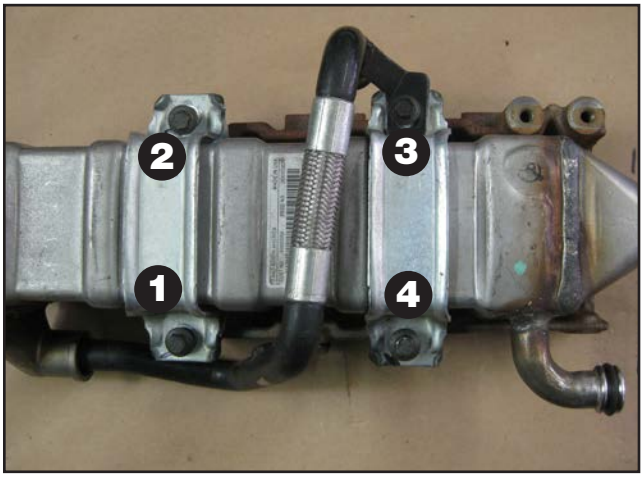

- Remove the four 10mm bolts that hold the EGR cooler to the manifold plate.

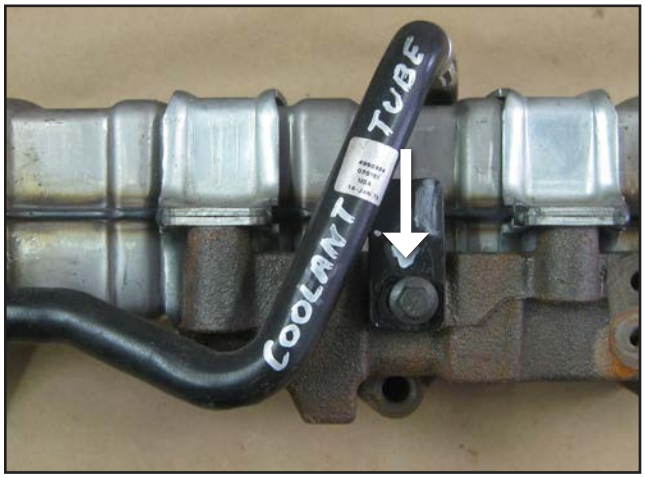

- Remove the remaining 10mm bolt that holds the coolant tube to the side of the manifold plate (see arrow).

Continued on Next Page ▶

"Perform Service" at 67,500 miles

- Now that the coolant tube is completely loose. Pull the tube up off of the vertical fitting that is on the cylinder head.

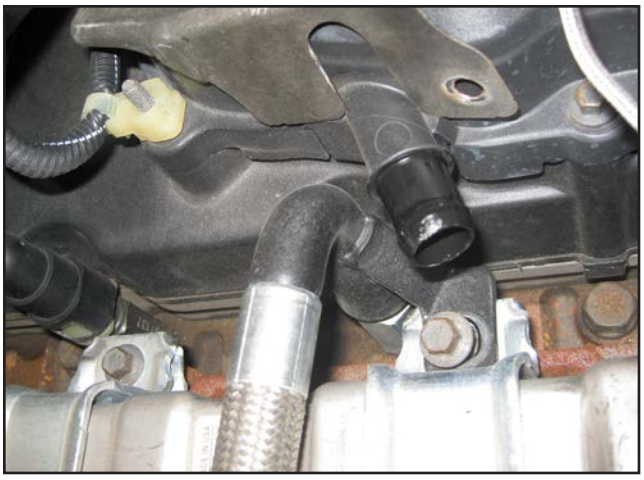

- Remove the CCV hose from over the EGR cooler.

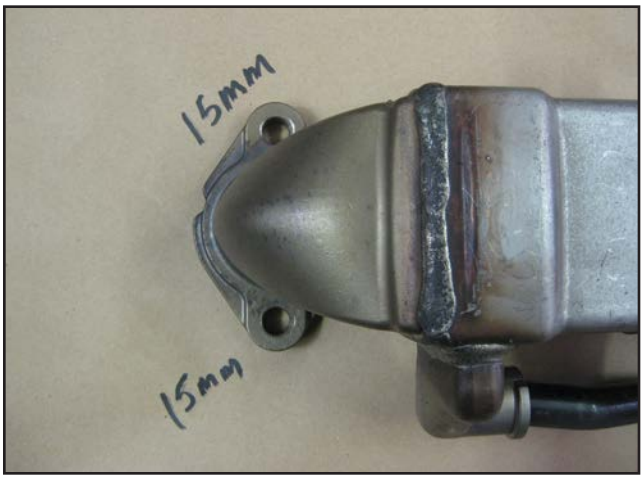

- Remove two 15mm nuts that hold the EGR cooler onto the exhaust manifold. Yes, these are hard to reach.
- Lift the cooler off of the exhaust manifold.

Continued on Next Page ▶

"Perform Service" at 67,500 miles

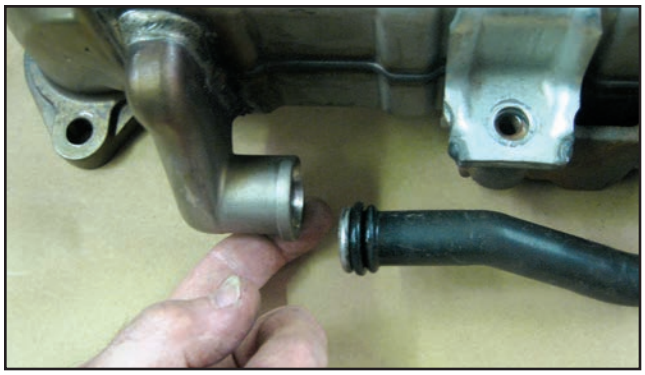

- Remove the rear coolant hose from the EGR cooler. Drain the remaining coolant from the EGR Cooler.

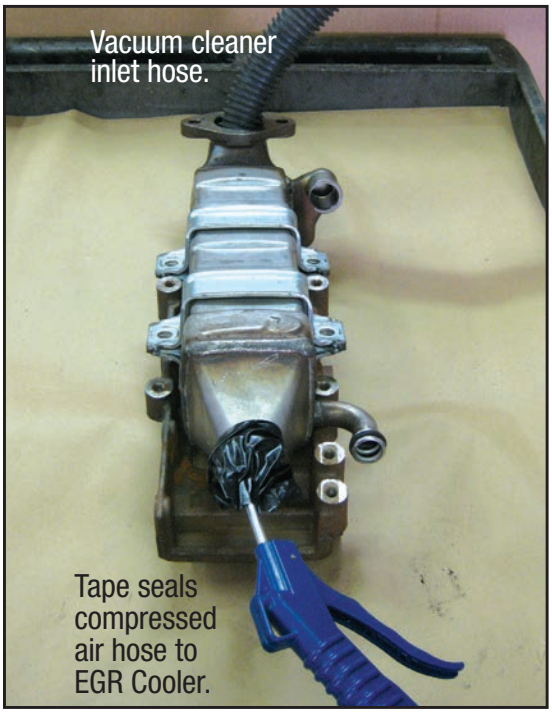

- With carefully regulated compressed air you can blow carbon into the inlet hose of a vacuum cleaner.

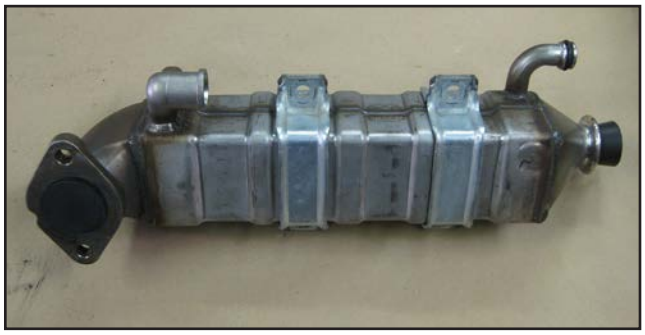

- Plug one end of the cooler with a rubber plug and fill with hot water and cleaning solution. Plug the other end and soak overnight.

Now that the cooler has been removed it is time for the overnight soak. To save cleaning solution and the associated messy waste, we have supplied two rubber plugs that fit into the cooler openings. Plug the cooler at both ends; fill it up the solution and hot water; shake it like you would a paint can; and allow it to sit overnight.

The next morning remove the rubber plugs and clean the inside as best that you can. A further trip to the local pressure washer facility with the cooler and a bit of left-over solution will make sure that it is really clean. For good housekeeping take the crossover pipe and other associated EGR hardware for cleaning. Do a final blow-out with compressed air.

Reassemble the cooler to the exhaust manifold.

"Perform Service" at 67,500 miles

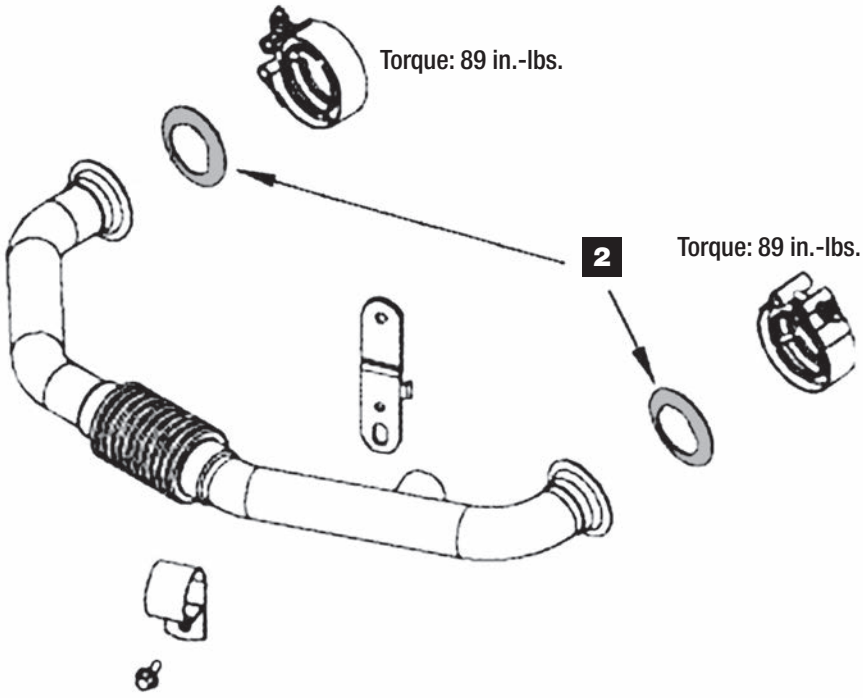

"Perform Service" at 67,500 miles

Torque:

EGR cooler mounting bracket to cylinder head bolts: 27 **ft.**-lbs.

Automatic trans dipstick tube to EGR cooler: 89 **in.**-lbs.

Engine cover bolts: 89 **in.**-lbs.

CCV cover 8mm bolts: 89 **in.**-lbs.

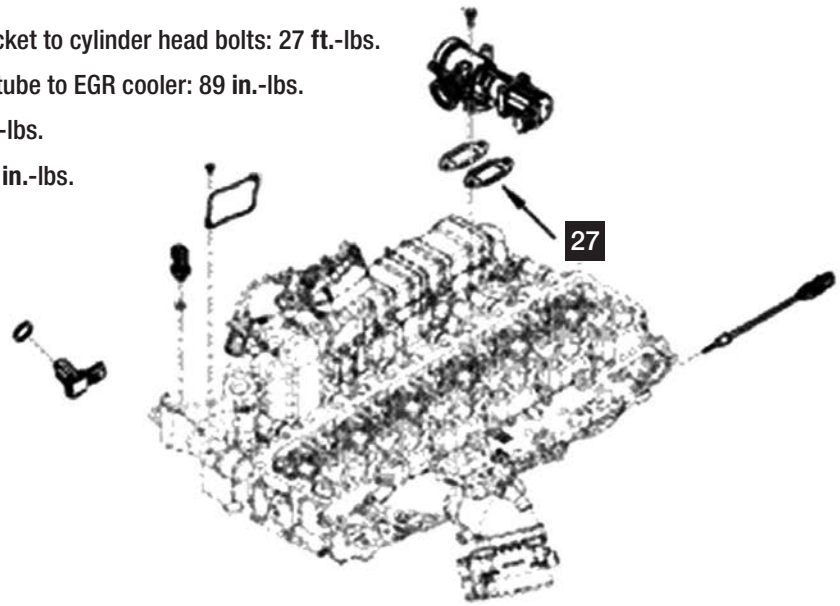

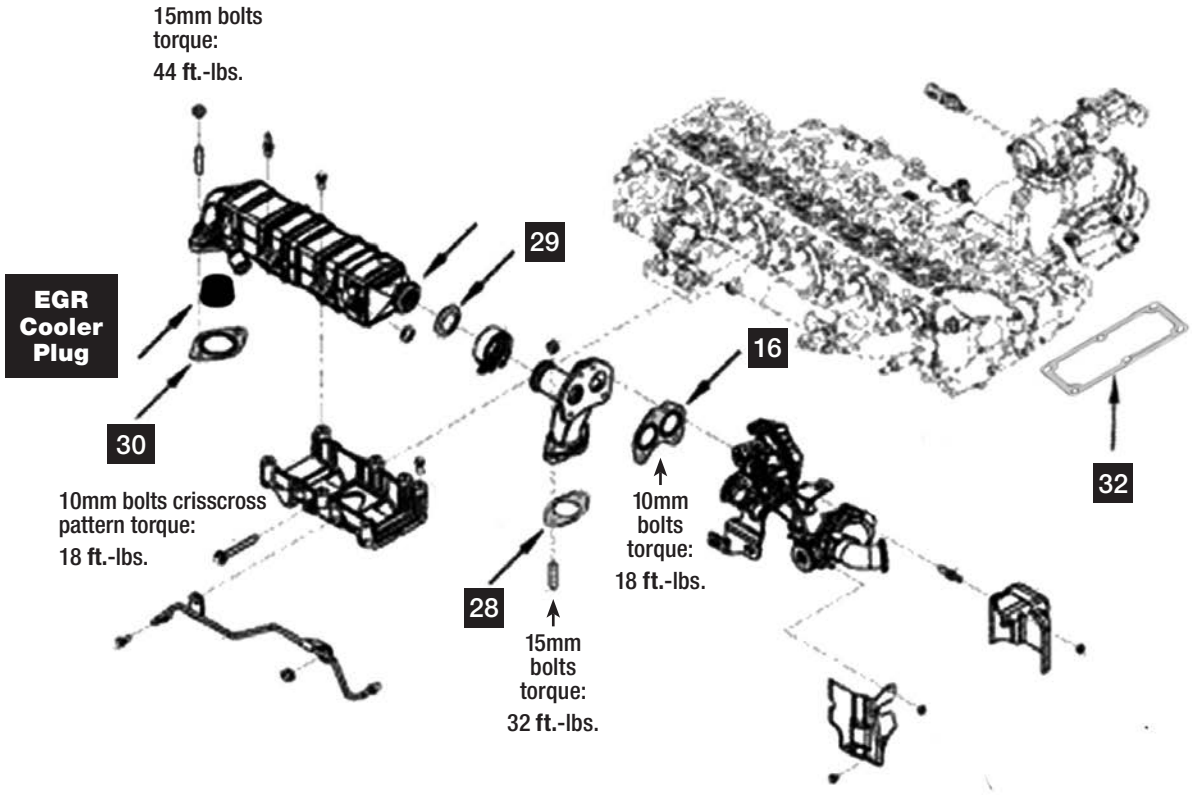
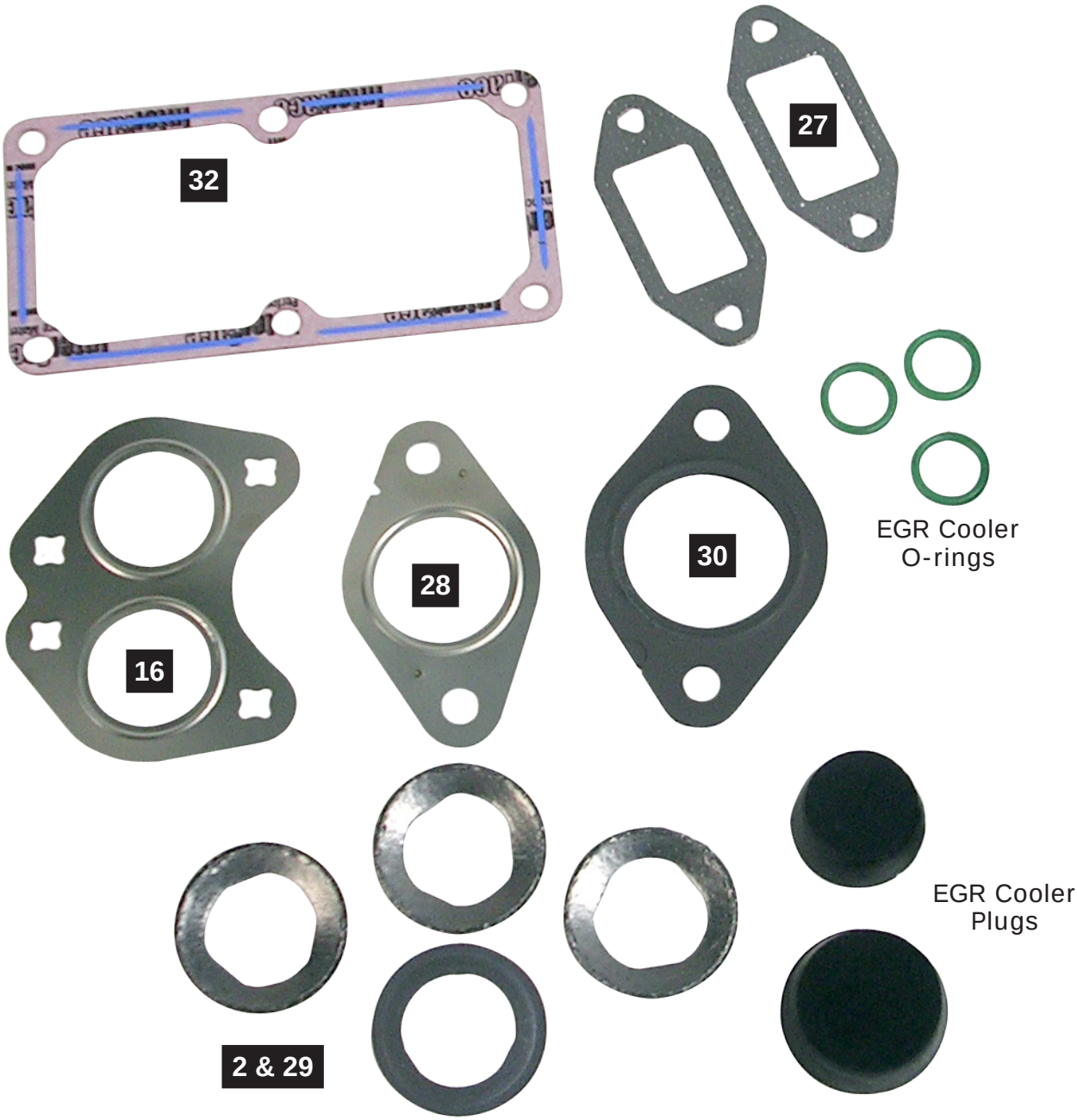
"Perform Service" at 67,500 miles