EGR Filter Service - 3500/4500/5500 Cab/Chassis Trucks

Let's break the service down into its three components:

Part 1: Change the crankcase vent (CCV) filter
Part 2: Remove and clean the exhaust gas recirculation (EGR) valve
Part 3: Remove and clean the EGR cooler assembly.

Part 1: Change the CCV Filter

The first service item, change the CCV filter, is very easy to do. The instructions were covered in the Turbo Diesel Register, specifically Issue 64, page 40.

In an effort to do a comprehensive 67,500 mile service article, this is what we found:

The CCV sits on top of the valve cover and, from what looks like last minute entry in the '07.5 Owners Manual, it requires inspection and/or changing every 67,500 miles. Furthermore, should the crankcase vent system become clogged there are diagnostic trouble codes (DTCs for the uninitiated) that will be set causing a malfunction indicator light (MIL for the uninitiated) to come on. Specifically the DTCs for CCV problems are: P1507 crankcase filter restriction; P1508 crankcase filter restriction—replace filter. If these codes are set the "Perform Service" message will illuminate on the dash display.

Likewise, at the 67,500 mile interval the "Perform Service" will automatically illuminate alerting you to check and clean the EGR valve, EGR cooler and to replace the CCV filter.

How do you change the CCV? The inspection and/or change of the filter is very easy. The steps:

- Remove the four 8mm bolts that hold the "batwing" cover in place. Remove the dipstick and then the cover.
- Remove the oil drain hose from the passenger side of the CCV filter. As you inspect the hose you should find that there is very little oil that makes it this far into the vent system.
- Remove the eight 8mm bolts that hold the CCV filter in place.

Removing the eight 8mm bolts that hold the CCV filter in place. DO NOT use the impact tool to reassemble and tighten the bolts.

Continued on Next Page ▶

EGR Filter Service - 3500/4500/5500 Cab/Chassis Trucks

- Remove the oil fill cap. For protection from debris, stuff a paper towel into the oil fill hole.
- With a large flat blade screwdriver, gently pry the CCV filter up and off.
- Upon inspection of the CCV filter, you'll see that it has two O-rings and a reusable V-gasket that effectively seal the filter in place.

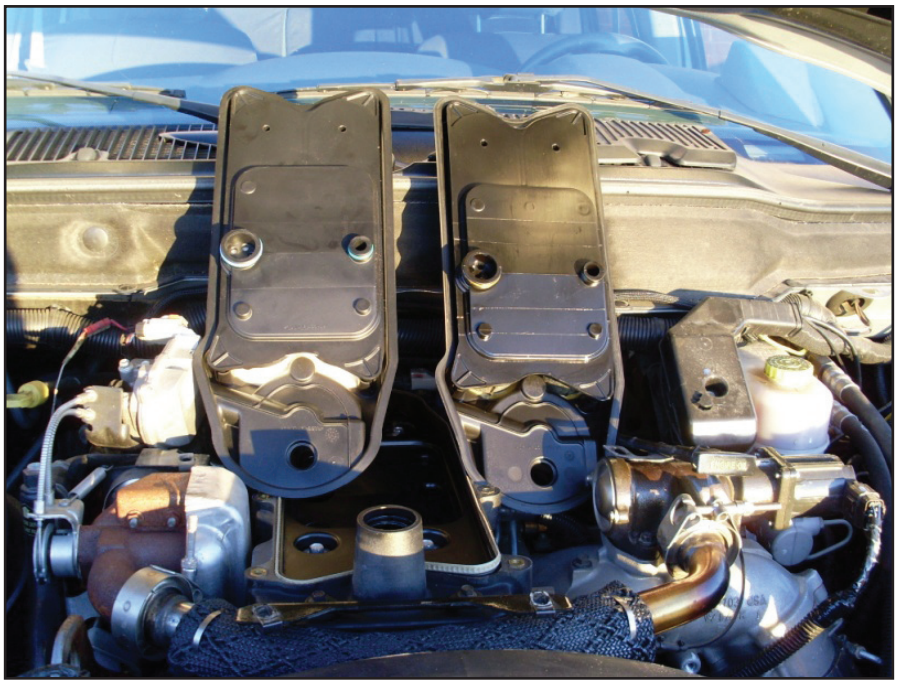

New CCV filter on the left. At 30,000 miles the CCV filter on the right looked clean and was reinstalled.

- Replace the CCV filter.
- Reassemble in reverse order.

Oops…wait one minute, we're not quite finished. How do you reset the "Perform Service" reminder that is now illuminated on your overhead display?

The procedure is outlined in your Owner's Manual and it is written as follows:

- Turn the ignition switch to the ON position. (Do not start the engine.)
- Press and release the brake pedal two times.
- Fully depress the accelerator pedal slowly two times within 10 seconds.
- Turn the ignition switch to the OFF/LOCK position.

The message should now be erased. You can also do your favorite dance afterward!

Geno suggests that you have a beer and toast to your success.

Continued on Next Page ▶

EGR Filter Service - 3500/4500/5500 Cab/Chassis Trucks

Part 2: Clean the EGR Valve

This service procedure is almost as easy as Part 1, changing the CCV filter. Let's pick up the instructions from the part where you have removed the dipstick and then the four 8mm bolts that hold the "batwing" in place.

- Remove the three 10mm bolts that hold the dipstick bracket in place.
- Next up, remove the electrical connector that goes to the EGR valve. With a small pick move/slide the red clip out allowing you to pinch the tang down to release the connector.
- Next remove the four 10mm bolts that hold the EGR valve in place. The bolts and the EGR valve can be removed. Lift the EGR valve off of the intake horn and it is ready for cleaning.
- Remove the four Phillips head screws that hold the valve motor to the EGR assembly. Lift the valve motor off.

Several shops that we've talked to suggested that you start the EGR valve cleaning process by blowing the carbon off of the EGR valve with regulated compressed air. Start at 10psi and increase the pressure as the dust flys—and the dust will fly. Your blowing should be done in the wide open spaces or, better yet, blow into an old shop vacuum that you no longer care about.

With the focus on saving you money, we wanted to test the effectiveness of the Mopar cleaning solution versus other cleaners in the market. Way back when we had equal success using Simple Green as the cleaning solution.

In June 2016 the folks at Truck Trend magazine did a bench-test of several other cleaning solutions (www.trucktrend.com/how-to/parts-accessories/1606-we-bench-test-diesel-egr-cooler-cleaning-solutions/). Their study was thorough and it is a great resource as you search for a good cleaner for this and other parts in your shop. Their winner was the least expensive cleaner/degreaser that they tested: Purple Power used in full strength concentration. Other products in the Truck Trend test were the following: Mopar cleaner; Simple Green; Piston Kleen and NAPA Carburetor Cleaner.

Our customers report better success with the Purple Power (thanks Jeffrey Porter).

- Drop the EGR housing and valve into the cleaning solution for an overnight soak.
- Remove and do a preliminary clean-up with a toothbrush.

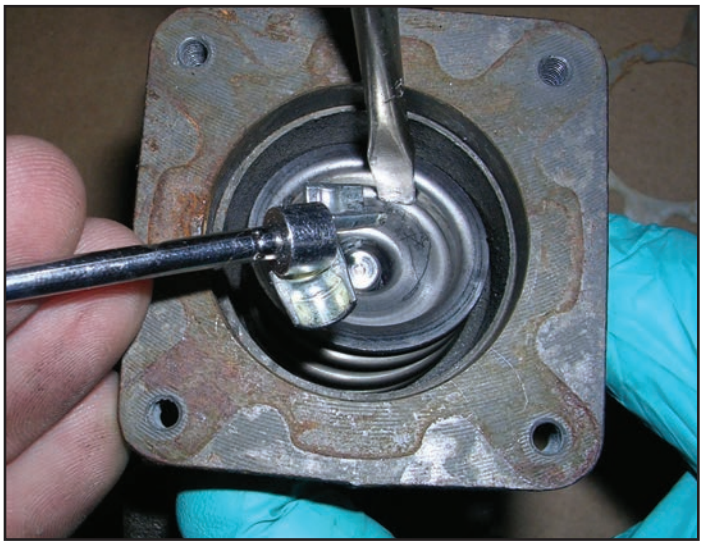

For complete cleaning you'll want to disassemble the EGR valve from the housing. The procedure is as follows:

- Using your fingers, a screwdriver or a socket, press down on the valve spring retainer.
- With the retainer pressed completely down the valve keepers should release from the valve. A light tap with a screwdriver or magnetic pick up tool may be needed.
- Remove the retainer and keepers.
- The valve can now move freely. Clean the valve and the valve seats. We used a toothbrush and a Scotchbrite pad for cleaning.
- Reassemble the EGR valve. The valve motor is not indexed. Reassemble it so that its connector is pointed towards the front of the truck.
- Reassemble the EGR valve back onto the air intake.

Continued on Next Page ▶

EGR Filter Service - 3500/4500/5500 Cab/Chassis Trucks

Part 3: Remove and Clean the EGR Cooler

Unlike the 6.7-liter engine in the 2500/3500 pickups for the consumer market, the EGR cooler on the 3500/4500/5500 Cab and Chassis trucks is not difficult to access. Below is a parts diagram/breakaway of the EGR cooler components.

In our kit we have included the following gaskets that will be needed in the removal/cleaning/installation process:

- 1 gasket #6
- 2 gasket #16
- 2 gasket #17
- 1 gasket #25
- 4 coolant O-rings *(not shown)*
- 2 Plugs for EGR cooler *(not shown)*

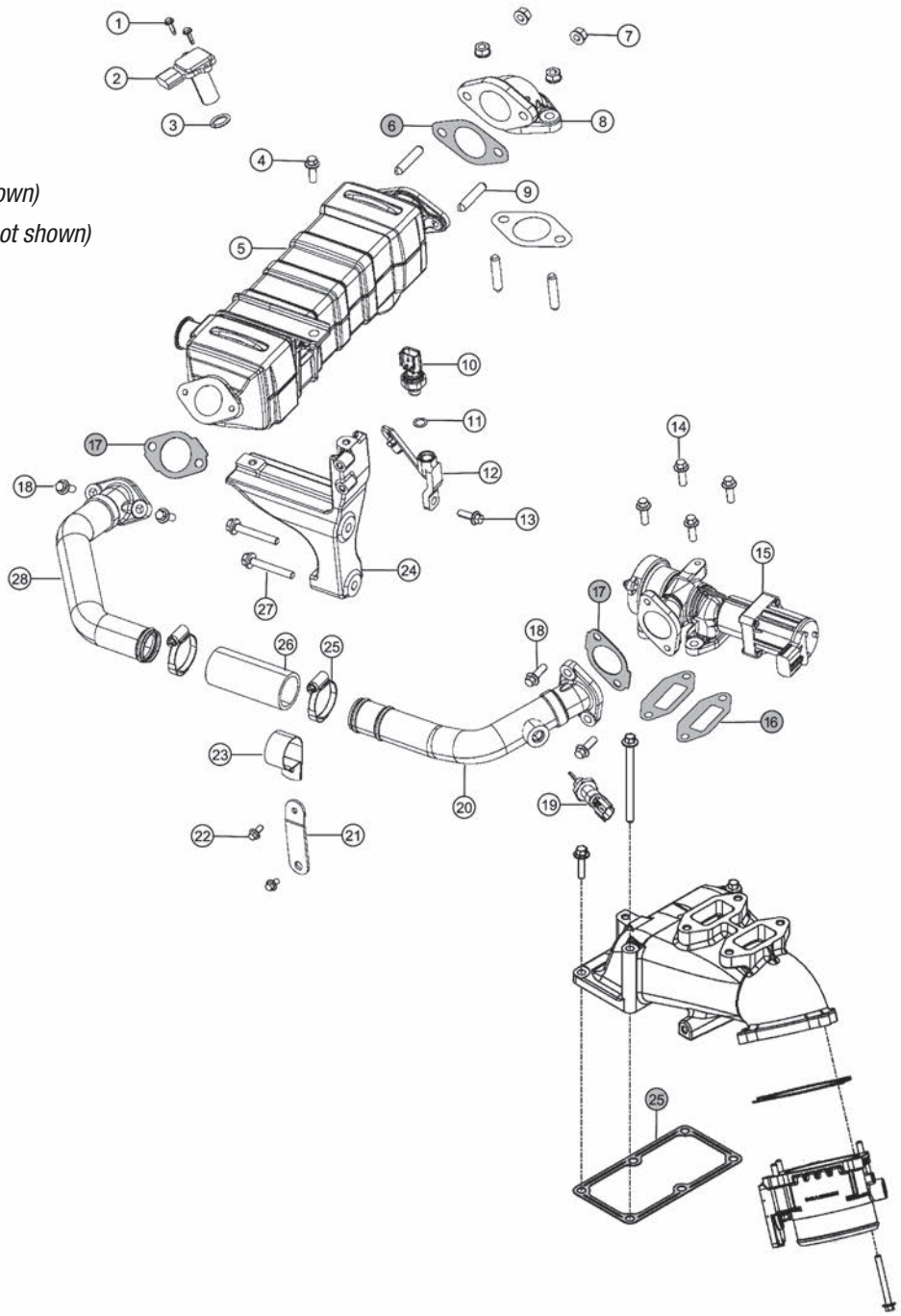

Continued on Next Page ▶

EGR Filter Service - 3500/4500/5500 Cab/Chassis Trucks

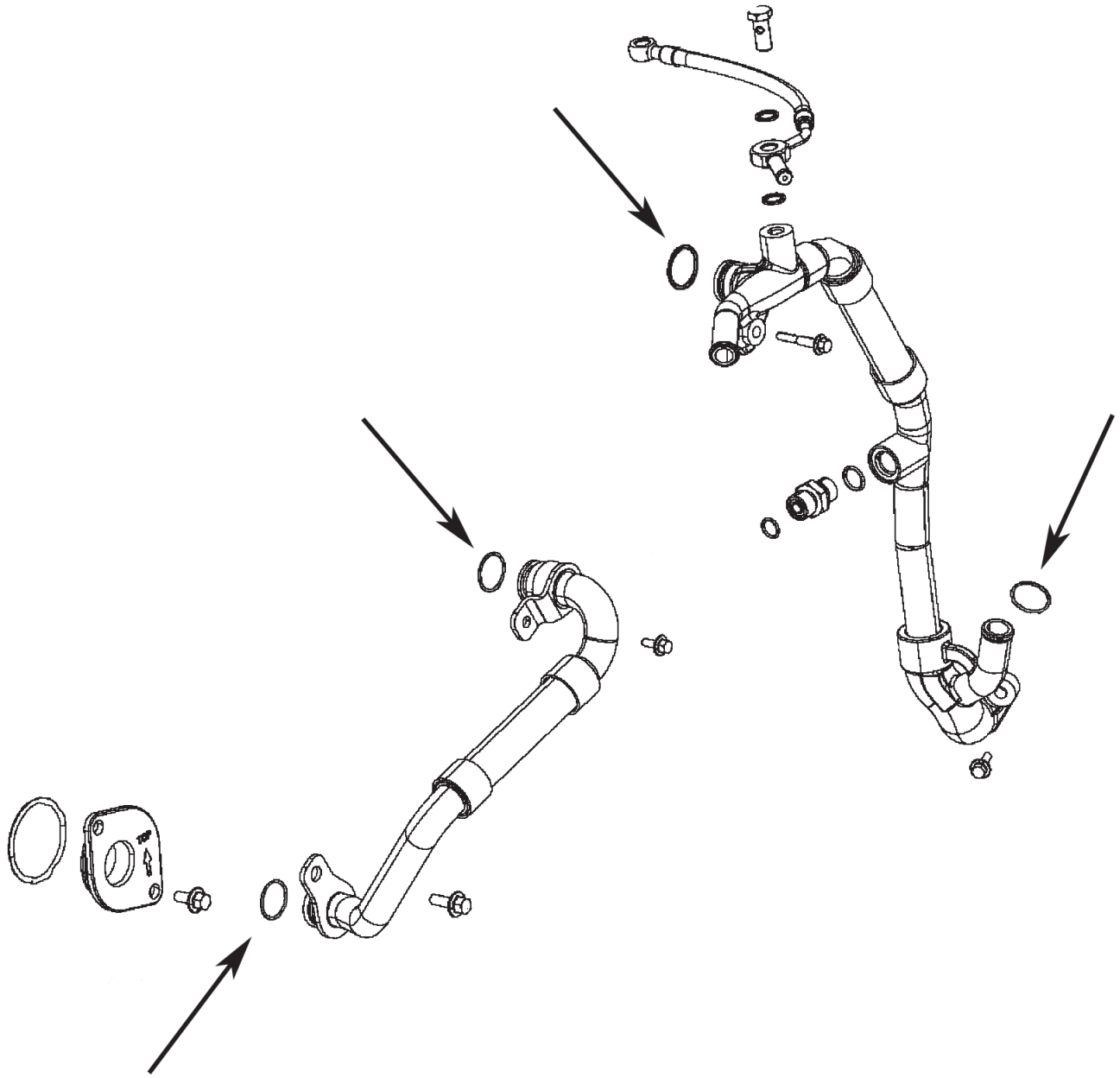

EGR Filter Service - 3500/4500/5500 Cab/Chassis Trucks

Several diesel truck repair shops we've talked to suggested that you start the EGR cooler cleaning process by blowing the carbon out of the EGR cooler with regulated compressed air. Start at 10psi and increase the pressure as the dust flys–and the dust will fly. Your blowing out of the EGR cooler should be done in the wide open spaces or, better yet, blow the dust into an old shop vacuum that you no longer care about.

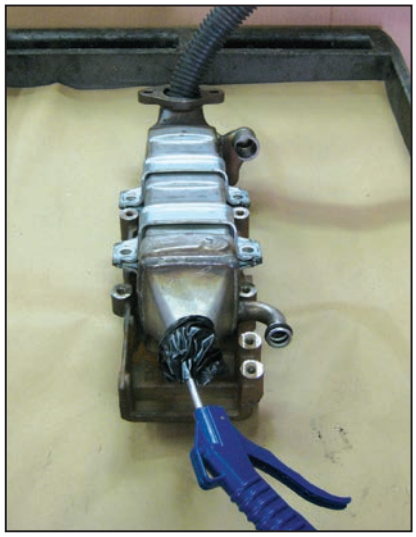

With carefully regulated compressed air you can blow carbon into the inlet hose of a vacuum cleaner.

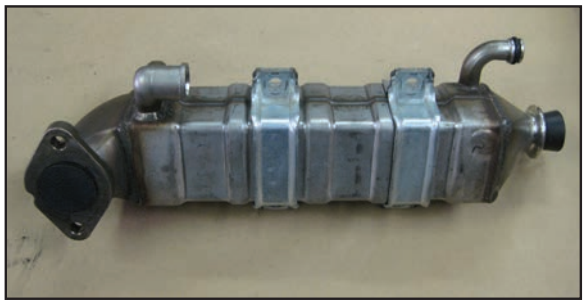

Plug one end of the cooler with a rubber plug and fill with hot water and cleaning solution. Plug the other end and soak overnight.

Now that the cooler has been removed it is time for the overnight soak. To save cleaning solution and the associated messy waste, we have supplied two rubber plugs that fit into the cooler openings. Plug the cooler at both ends; fill it up the solution and hot water; shake it like you would a paint can; and allow it to sit overnight.

The next morning remove the cooler and cleaned inside as best that you can. A further trip to the local pressure washer facility with the cooler and a bit of left-over solution will make sure that it is really clean. For good housekeeping take the crossover pipe and other associated EGR hardware for cleaning. Do a final blow-out with compressed air.

Reassemble the cooler to the exhaust manifold.

Freddy Frugal knows that if you are going to spend time cleaning the EGR valve and EGR cooler, that you'll remove and clean the air intake horn that the EGR valve is bolted to. The replacement gasket for the air horn-to-intake manifold is 5264566 and it is included with the EGR Cleaning Kit.